# TPO INTERNAL ULTRAPLY

## Technical Guidelines

Firestone

NOBODY COVERS YOU BETTER™

# DETAIL DRAWINGS

Firestone

NOBODY COVERS YOU BETTER™

# 5 Detail drawings

The information on this chapter is complementary to Chapter 1 (Design) and Chapter 3 (Installation) and serves to complete the design and execution of Firestone UltraPly™ TPO roofing systems in a safe and durable way.

Specifiers and installers will find a vast list of standard drawings that contain information about the correct build-up of the different Firestone UltraPly™ TPO roofing details.

Please note that these drawings are not designed on scale and do not include any information on vapor control layers. Therefore, they need to be considered as details that are applicable in standard roofing situations.

For an easy tracking, we have organized the Firestone UltraPly™ TPO details in the following sections:


| | | |
|---|---|---|
| 5.1 | Welded seams | 5.3 |
| 5.2 | Base tie-ins | 5.15 |
| 5.3 | Corners | 5.25 |
| 5.4 | Penetrations | 5.33 |
| 5.5 | Drains | 5.43 |
| 5.6 | Expansion joints | 5.49 |
| 5.7 | Roof edges | 5.55 |
| 5.8 | Wall terminations | 5.63 |


As the situation on site may differ from the conditions represented in these details, please contact Firestone's technical department or a Firestone technician for design and approval of an alternative detail.

## 5.1 Welded seams

| | |
|---|---|
| T-WS-1 | Welded seam using automatic welder |
| T-WS-2 | Welded seam using hand welder |
| T-WS-3 | Fastener layout and factory markings |
| T-WS-4 | TPO induction welding plate |
| T-WS-5 | Membrane repair over TPO induction welding plate |
| T-WS-6 | Cut edge treatment |
| T-WS-7 | T-joint with Unsupported Flashing |
| T-WS-8 | T-joint with Unsupported Flashing at intersection of two seams |
| T-WS-9 | T-joint with Unsupported Flashing at base of curb or wall |
| T-WS-10 | T-joints at 4 T-crossing membranes |

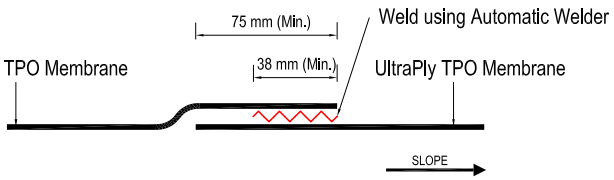


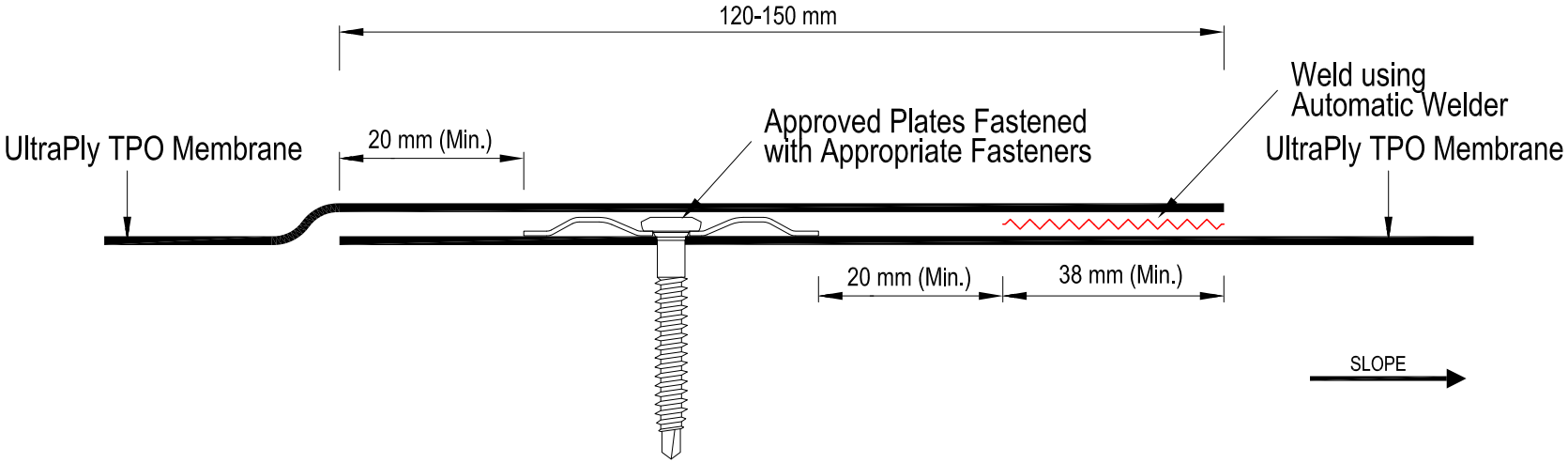


| | | | |
|---|---|---|---|
| Firestone<br>Firestone Building Products | **UltraPly TPO**<br>Welded seam<br>using Automatic Welder | **No.:** T - WS - 1<br>05/2018 | **Systems**<br>All |

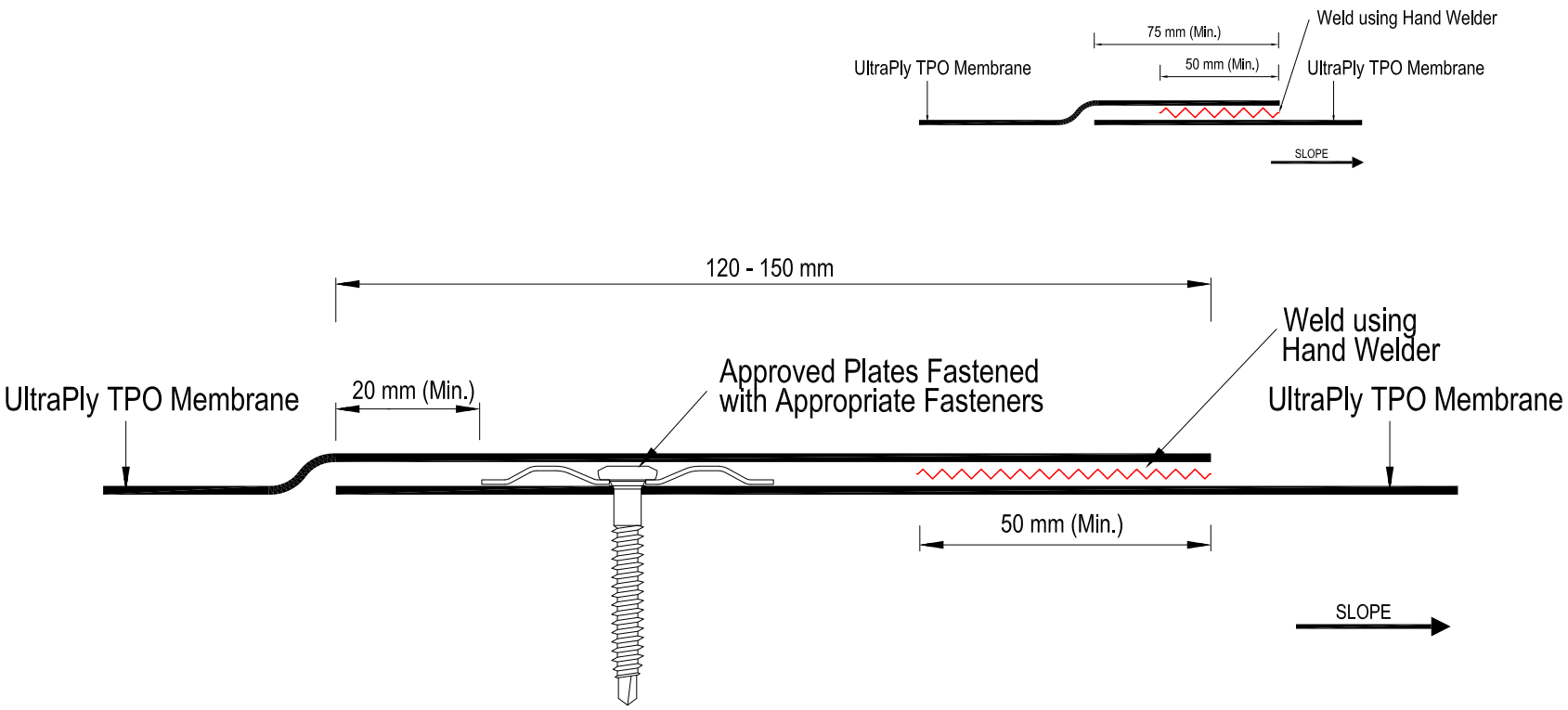


| | | | |
|---|---|---|---|
| Firestone<br>Firestone Building Products | **UltraPly TPO**<br>Welded seam<br>using Hand Welder | **No.:** T - WS - 2<br>05/2018 | **Systems**<br>All |

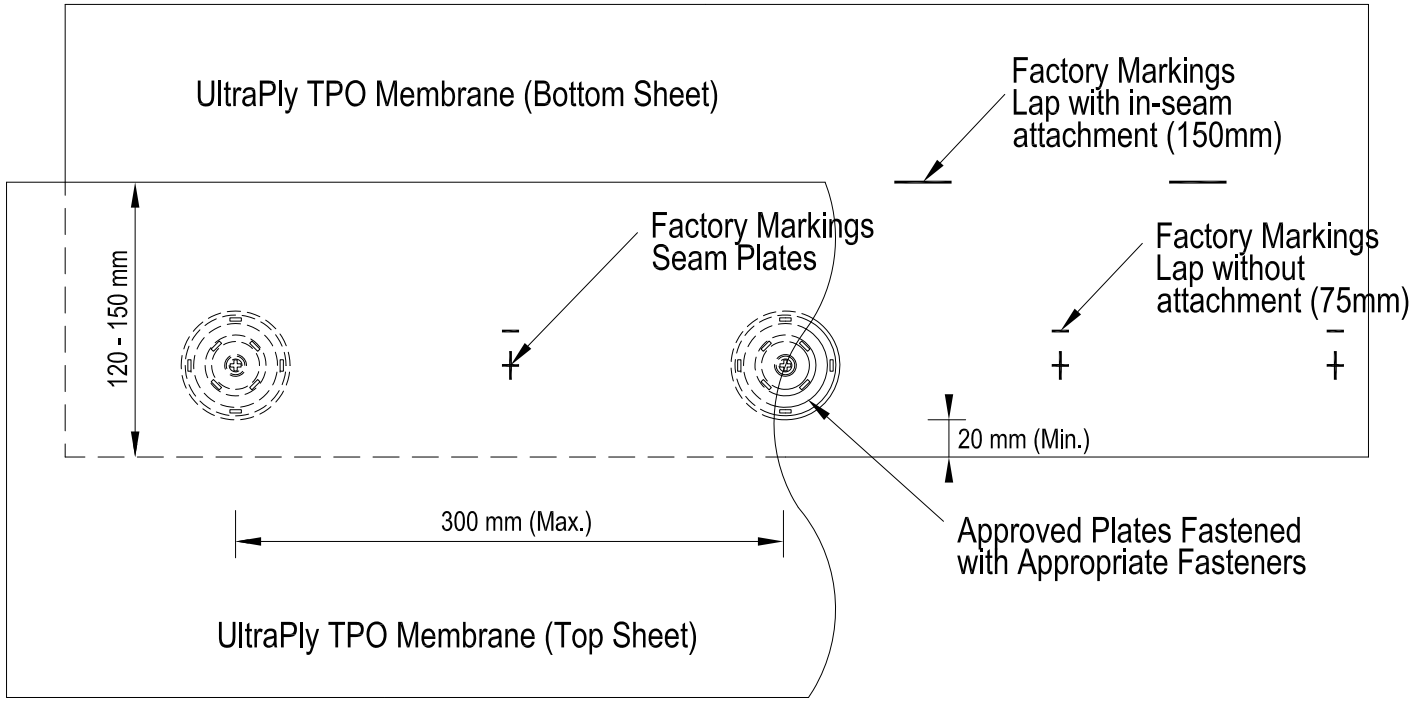


| | | | |
|---|---|---|---|
| Firestone<br>Firestone Building Products | **UltraPly TPO**<br>Fastener Layout<br>and Factory Markings | **No.:** T - WS - 3<br>05/2018 | **Systems**<br>MEC. |

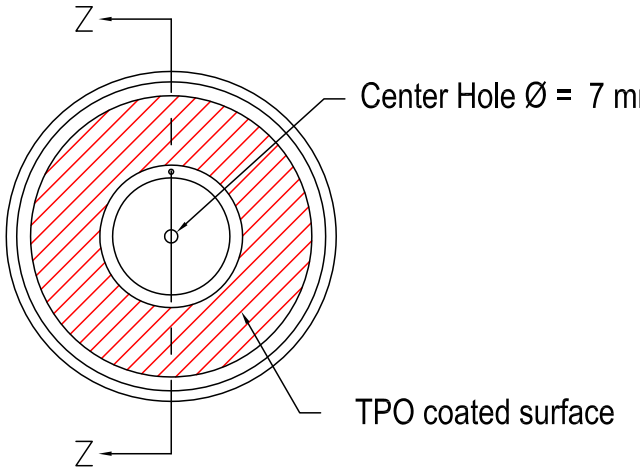


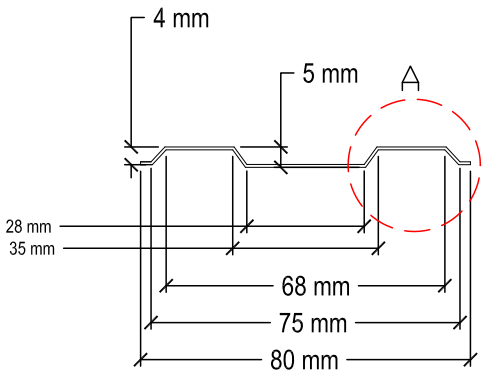


DETAIL Z-Z

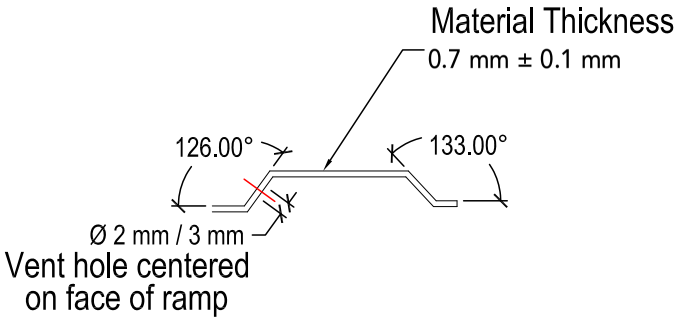


DETAIL A

| | | | |
|---|---|---|---|
| Firestone<br>Firestone Building Products | **UltraPly TPO**<br>TPO Induction Welding Plate | **No.:** T - WS - 4<br>05/2018 | **Systems**<br>Induction Weld |

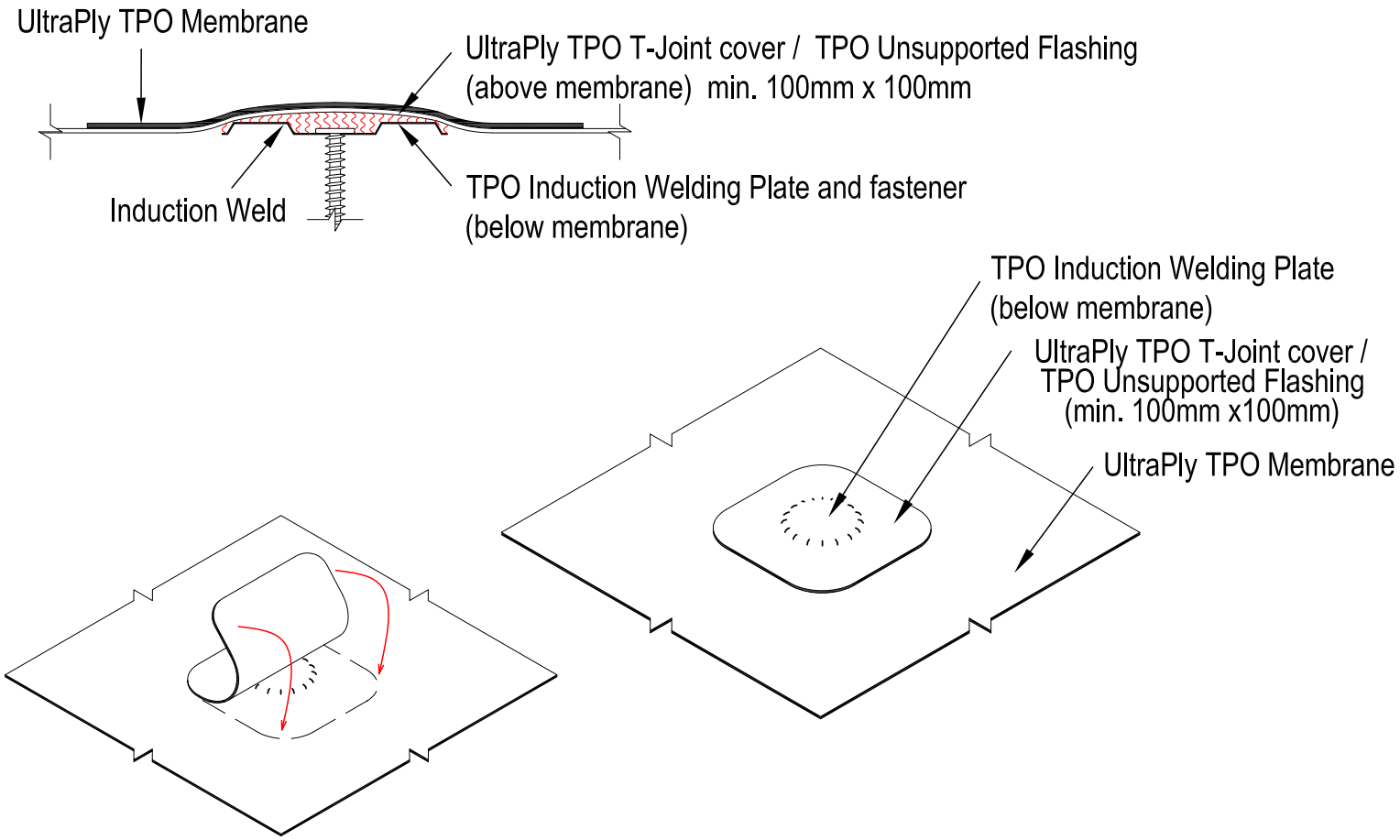


| | | | |
|---|---|---|---|
| Firestone<br>Firestone Building Products | **UltraPly TPO**<br>Membrane repair over<br>TPO Induction Welding Plate | **No.:** T -WS - 5<br>05/2018 | **Systems**<br>Induction Weld |

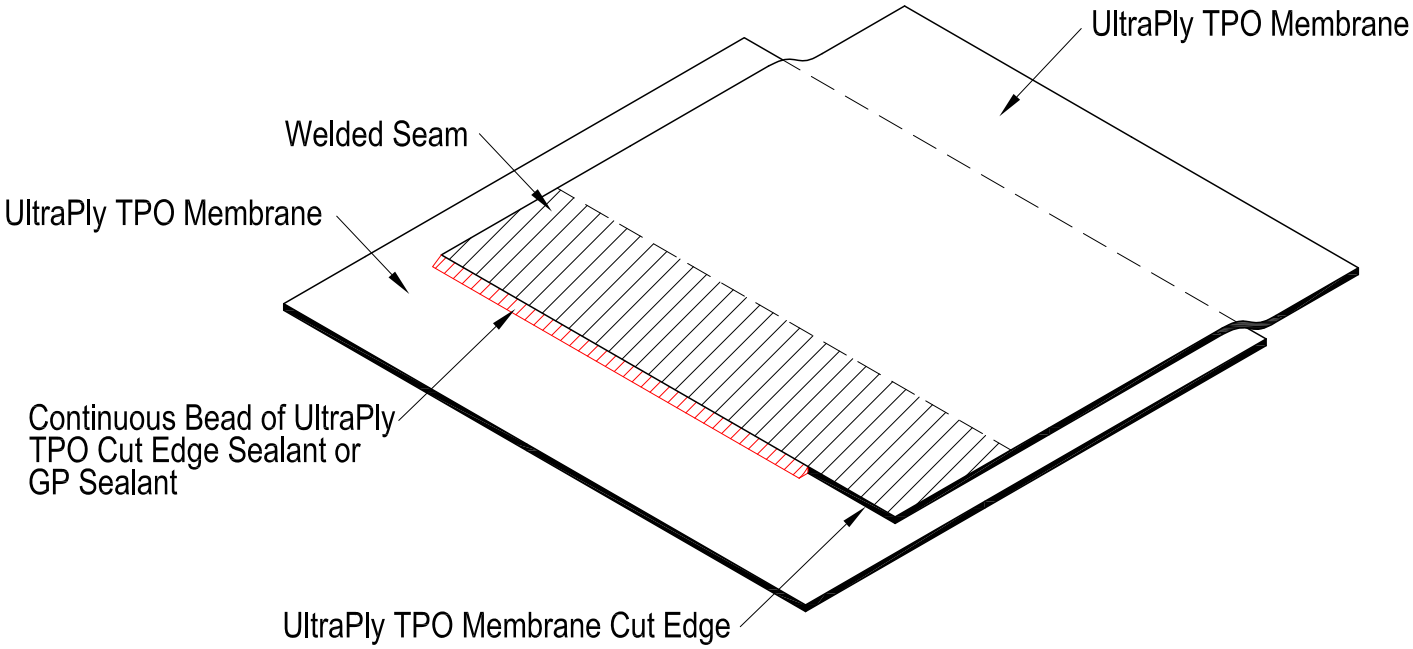


Note: When polyester reinforcement of TPO is exposed, apply Cut Edge or GP Sealant to entire exposed edge.

| | | | |
|---|---|---|---|
| Firestone<br>Firestone Building Products | **UltraPly TPO**<br>Cut Edge Treatment | **No.:** T - WS - 6<br>05/2018 | **Systems**<br>All |

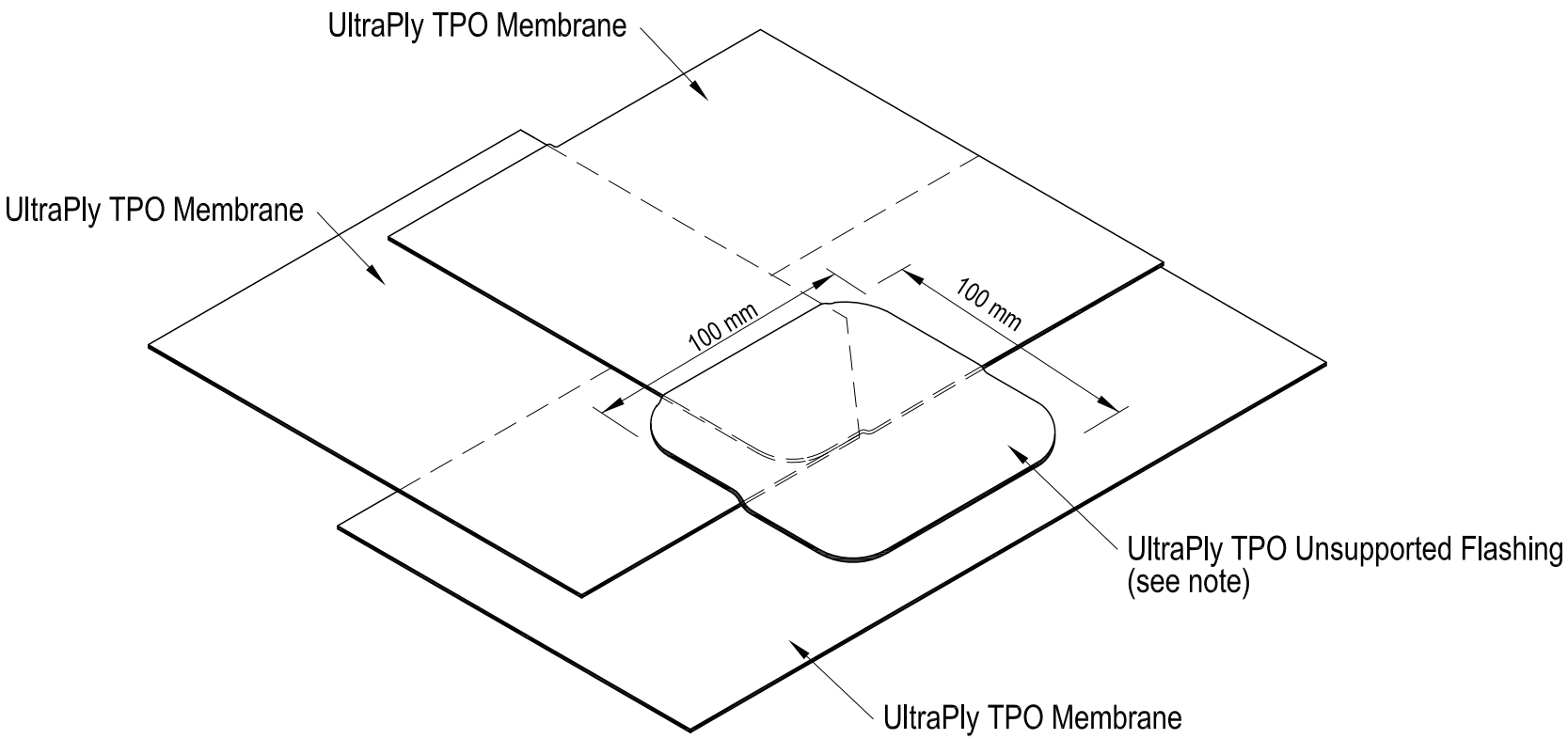


Note: T-joint with UltraPly TPO Unsupported Flashing required for 1.52 mm membrane only

| | | | |
|---|---|---|---|
| Firestone<br>Firestone Building Products | **UltraPly TPO**<br>T-joint with Unsupported Flashing | **No.:** T - WS - 7<br>05/2018 | **Systems**<br>All |

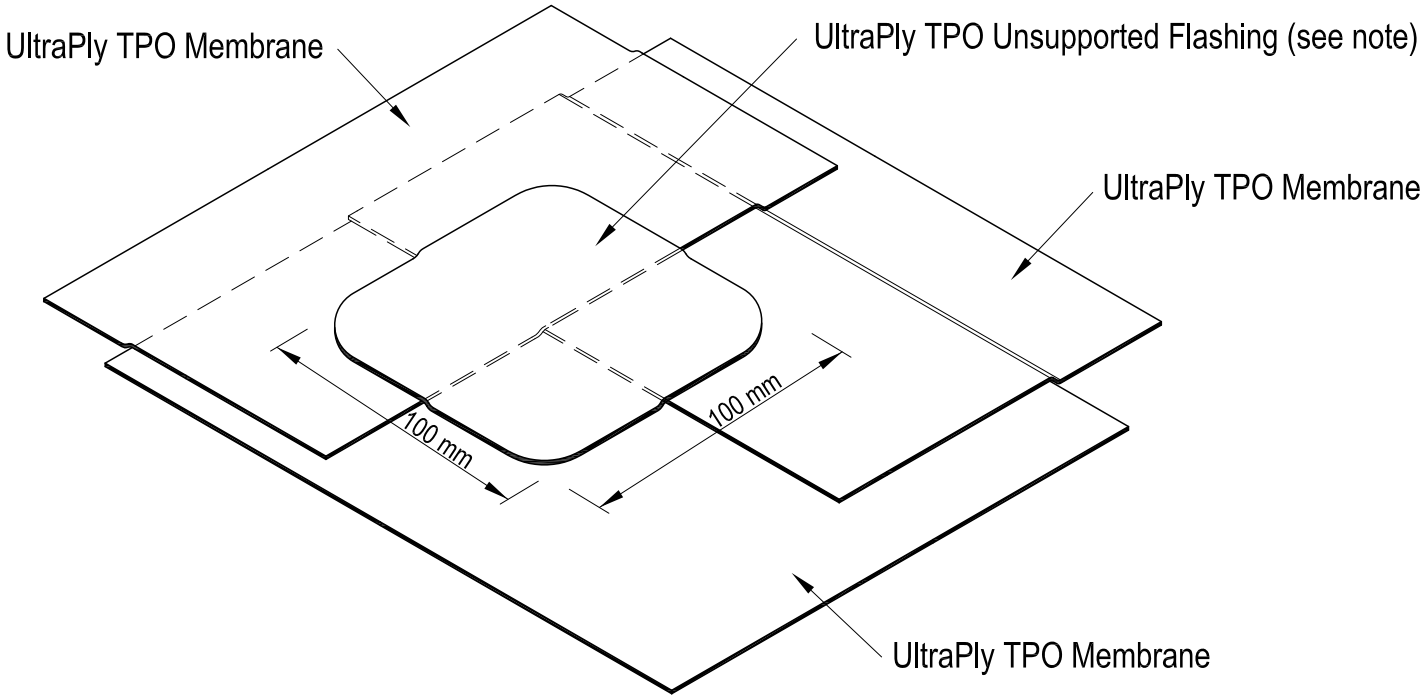


Note: T-joint with UltraPly TPO Unsupported Flashing required for 1.52 mm membrane only

| | | | |
|---|---|---|---|
| Firestone<br>Firestone Building Products | **UltraPly TPO**<br>T-joint with Unsupported Flashing at intersection of two seams | **No.:** T - WS - 8<br>05/2018 | **Systems**<br>All |

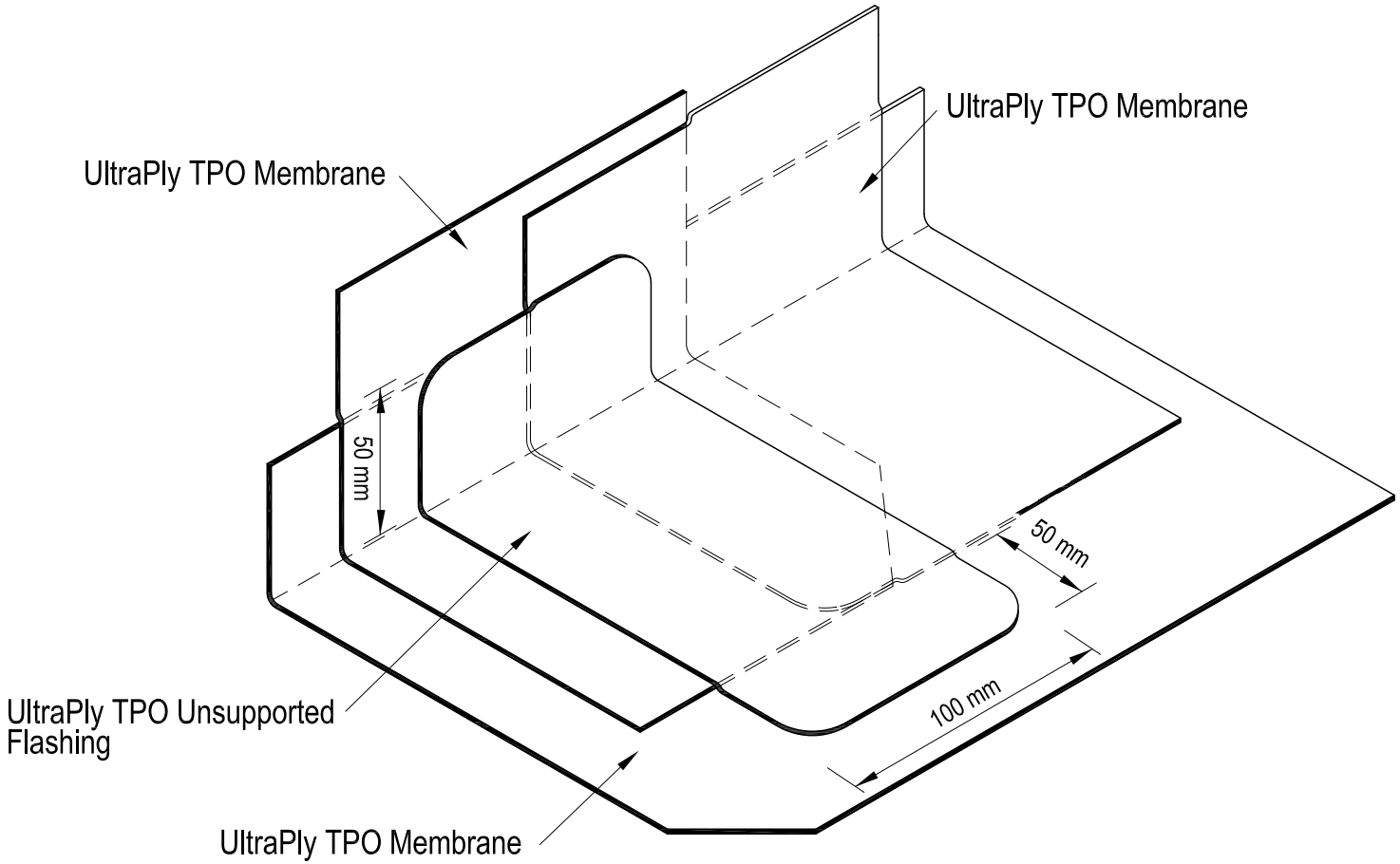


| | | | |
|---|---|---|---|
| Firestone<br>Firestone Building Products | **UltraPly TPO**<br>T-joint with Unsupported Flashing at base of Curb Or Wall | **No.:** T - WS - 9<br>05/2018 | **Systems**<br>All |

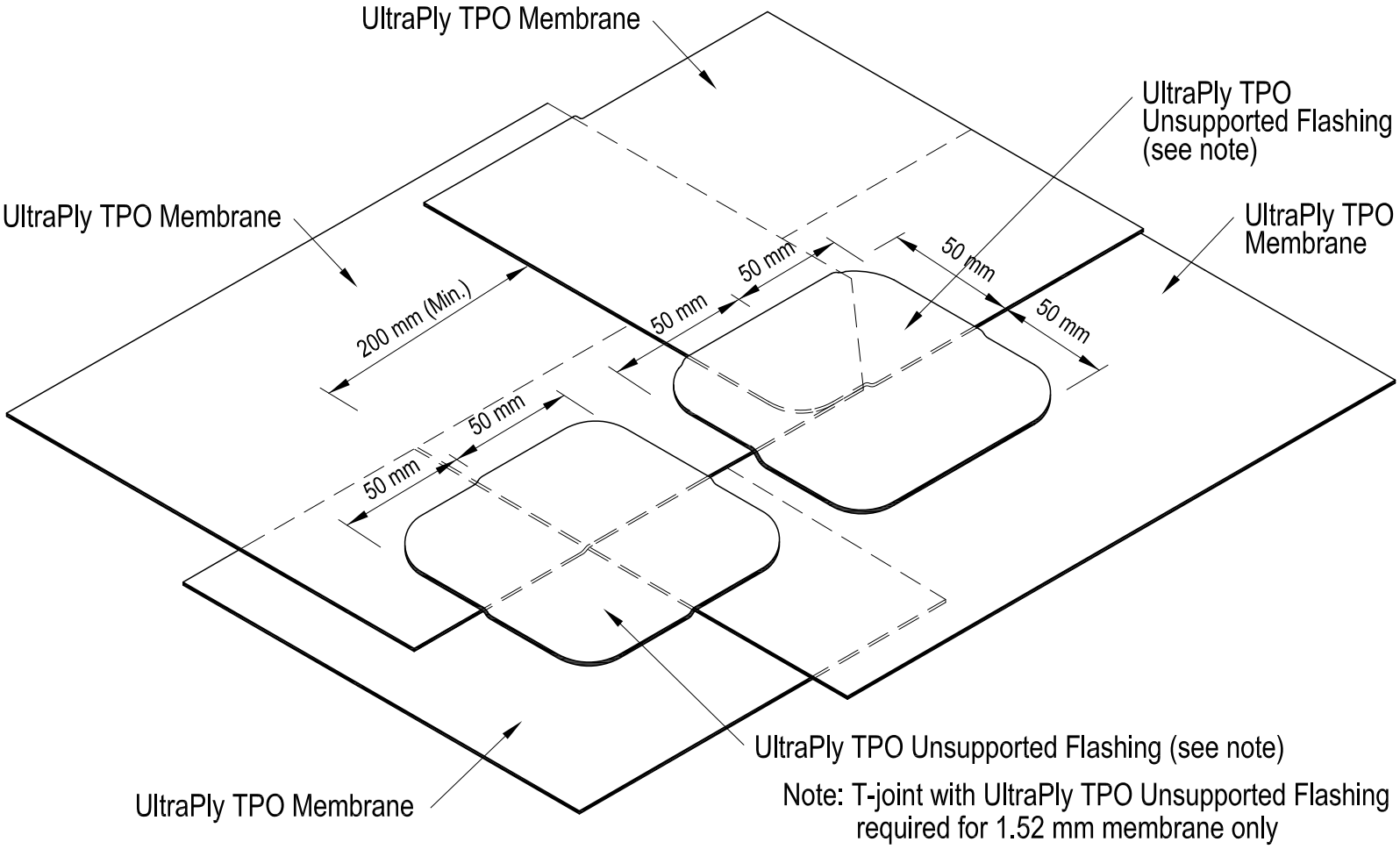


Note: T-joint with UltraPly TPO Unsupported Flashing required for 1.52 mm membrane only

| | | | |
|---|---|---|---|
| Firestone<br>Firestone Building Products | **UltraPly TPO**<br>T-joints at 4 T-crossing Membranes | **No.:** T - WS - 10<br>05/2018 | **Systems**<br>All |

## 5.2 Base tie-ins

| | |
|---|---|
| T-BT-1 | Base tie-in using plates fastened to deck |
| T-BT-2 | Base tie-in using plates fastened to upstand |
| T-BT-3 | Base tie-in using plates fastened to upstand with existing cant |
| T-BT-4 | Base tie-in at inside corner using HD seam plates |
| T-BT-5 | Base tie-in at inside corner using non-Firestone plates |
| T-BT-6 | Base tie-in at outside corner using HD seam plates |
| T-BT-7 | Base tie-in at outside corner using non-Firestone plates |
| T-BT-8 | Base tie-in with TPO induction welding plates |

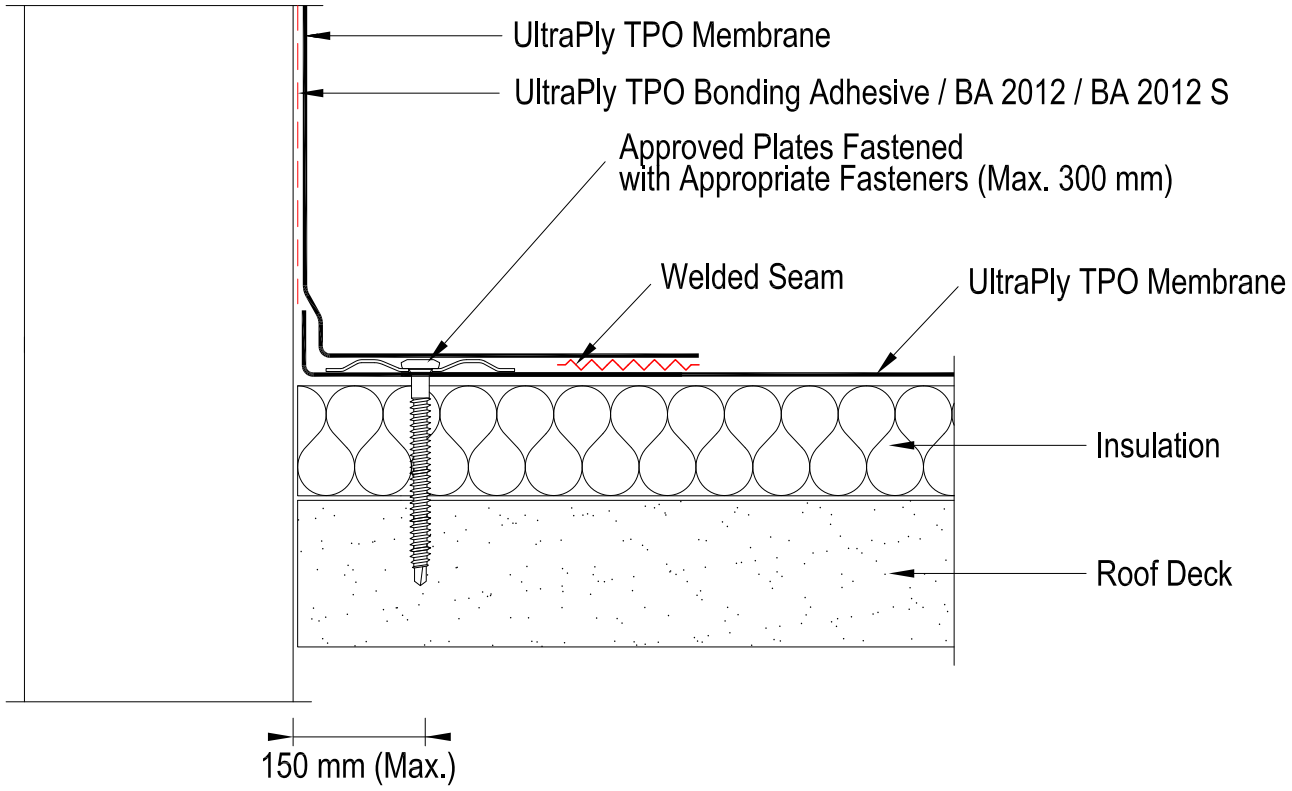


| | | | |
|---|---|---|---|
| Firestone<br>Firestone Building Products | **UltraPly TPO**<br>Base Tie-In<br>using Plates Fastened to Deck | **No.:** T - BT - 1<br>05/2018 | **Systems**<br>All |

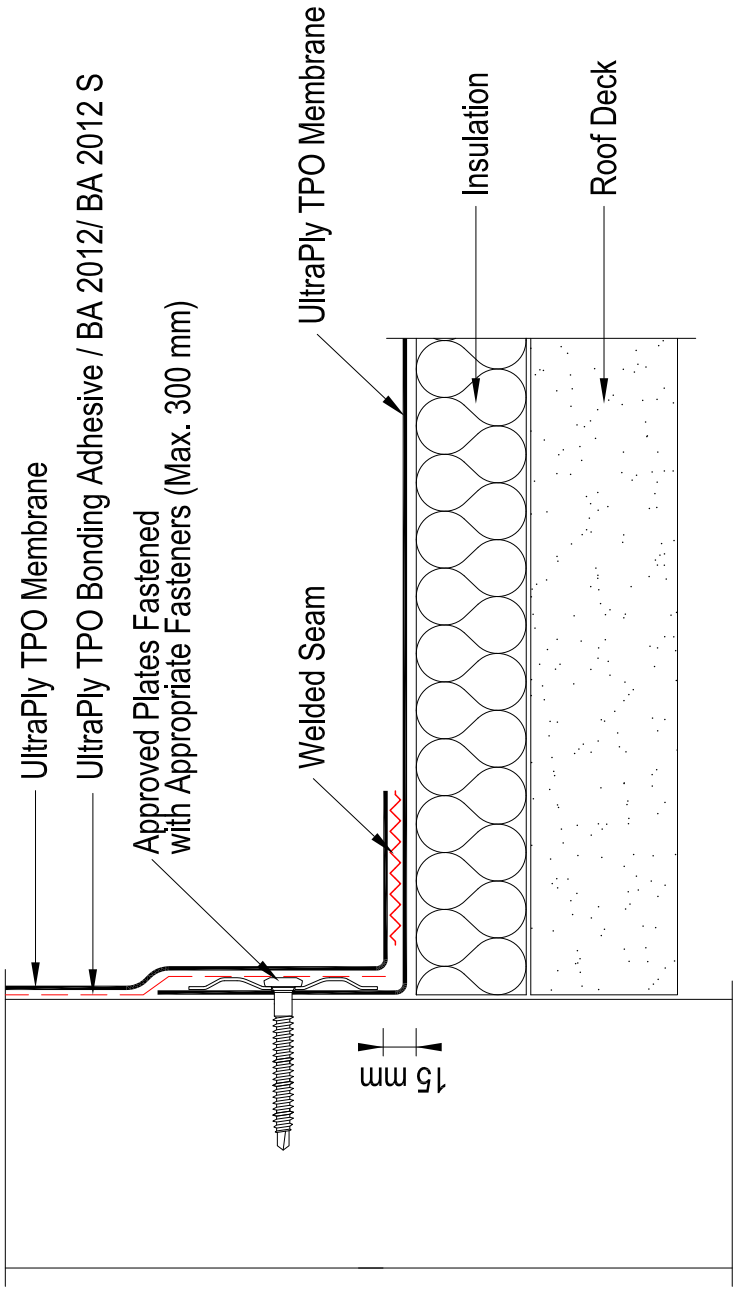


**Systems**
All

**No.:** T - BT - 2
05/2018

**UltraPly TPO**
Base Tie-In using Plates
Fastened to Upstand

Firestone
Firestone Building Products

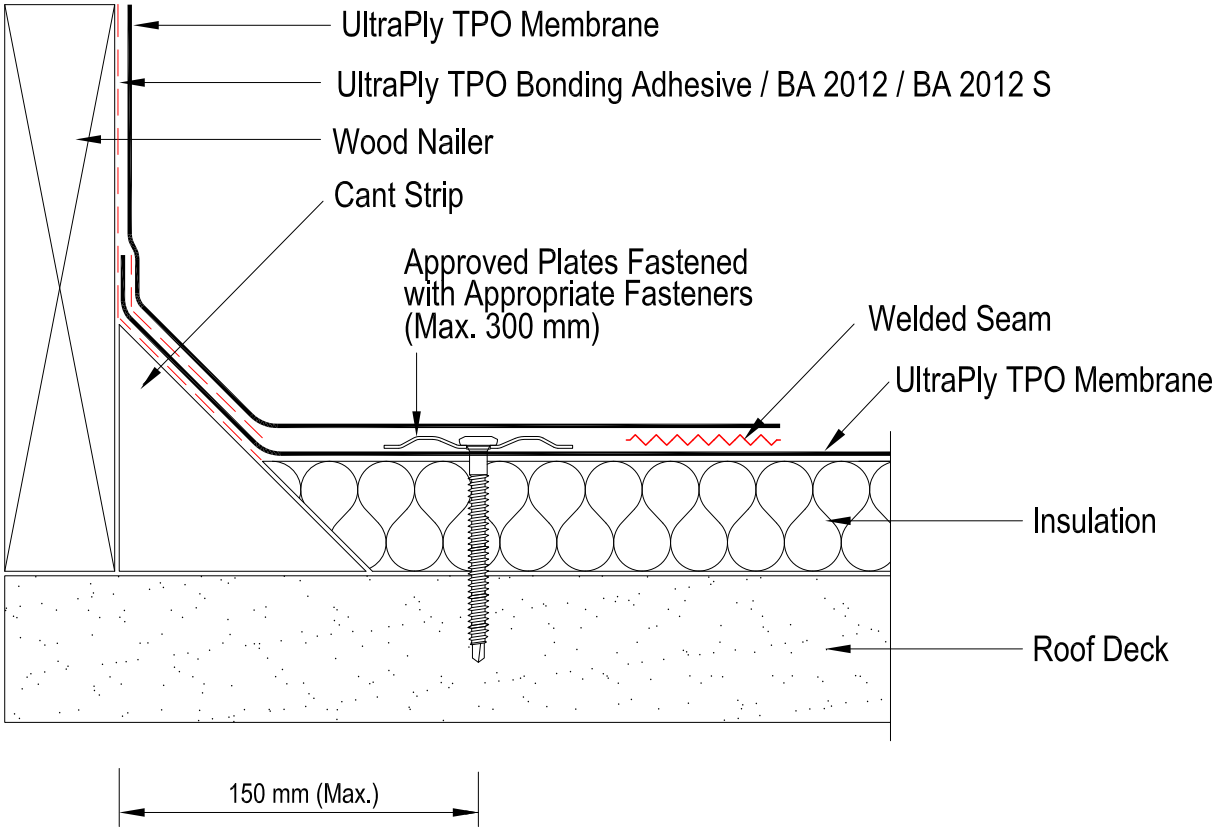


| | | | |
|---|---|---|---|
| Firestone<br>Firestone Building Products | **UltraPly TPO**<br>Base Tie-In using plates at Upstand with Existing Cant | **No.:** T - BT - 3<br>05/2018 | **Systems**<br>All |

## Wall / Upstand Attachment

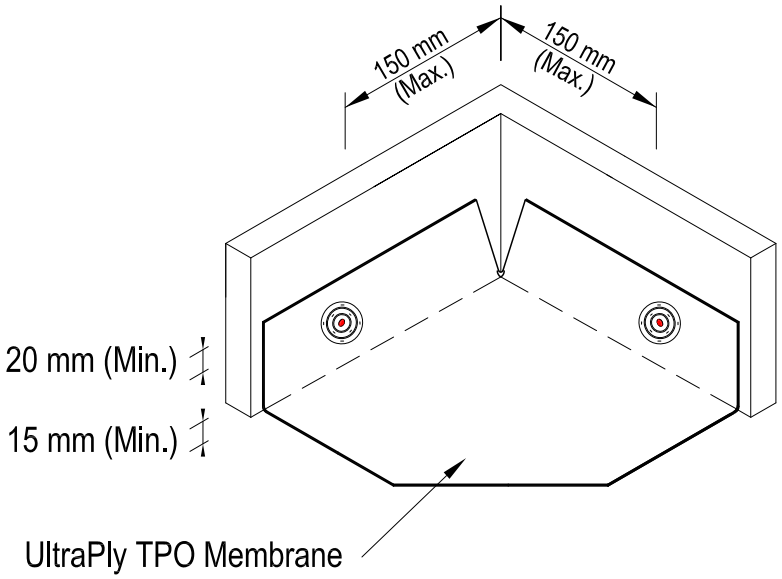


## Roof Deck Attachment

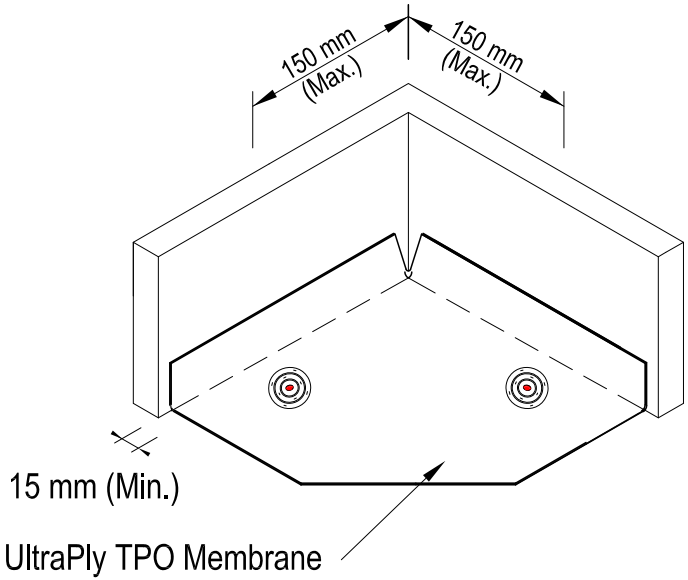


Note: Base Flashings and Terminations are not shown for clarity.
Refer to appropriate Termination & Base Tie-In details.

| | | | |
|---|---|---|---|
| Firestone<br>Firestone Building Products | **UltraPly TPO**<br>Base Tie-In at Inside Corner using HD Seam Plates | **No.:** T - BT - 4<br>05/2018 | **Systems**<br>All |

**Wall / Upstand Attachment**

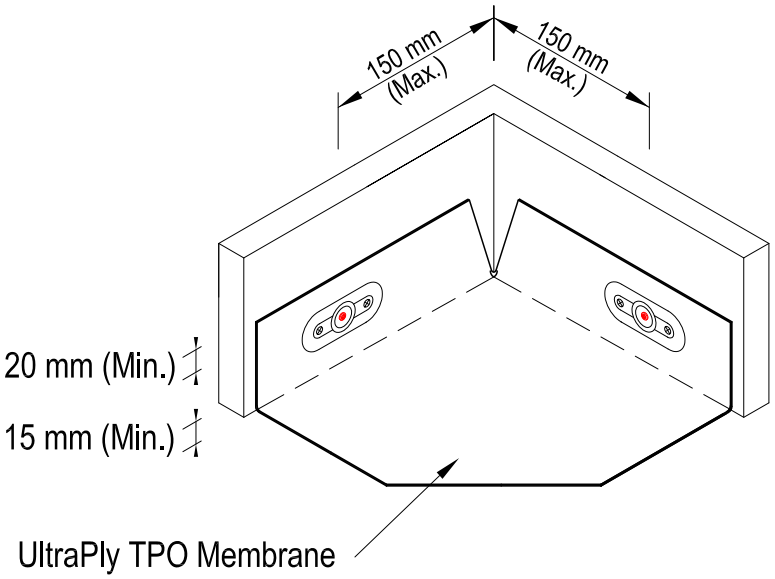


**Roof Deck Attachment**

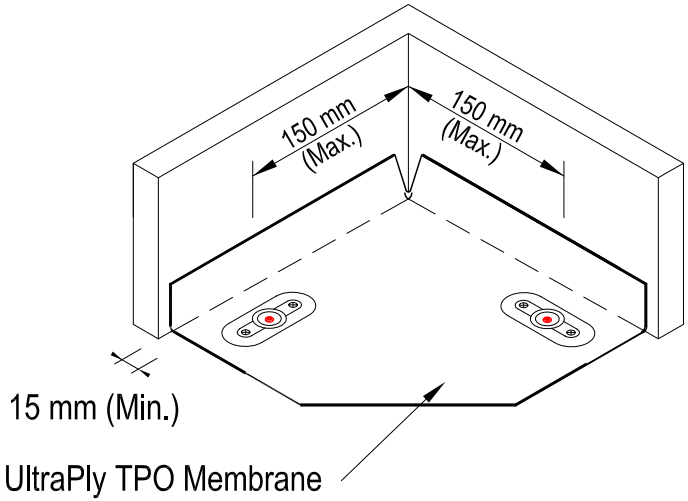


Note: Base Flashings and Terminations are not shown for clarity.
Refer to appropriate Termination & Base Tie-In details.

| | | | |
|---|---|---|---|
| Firestone<br>Firestone Building Products | **UltraPly TPO**<br>Base Tie-In at Inside Corner using non-Firestone Plates | **No.:** T - BT - 5<br>05/2018 | **Systems**<br>All |

## Wall / Upstand Attachment

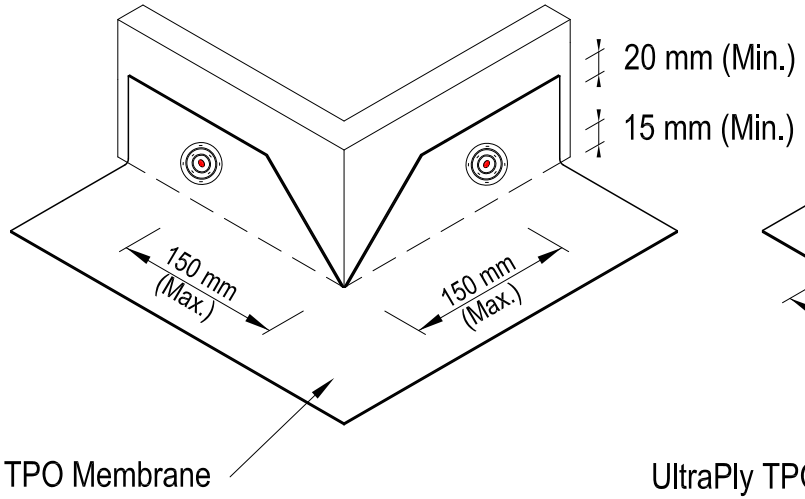


## Roof Deck Attachment

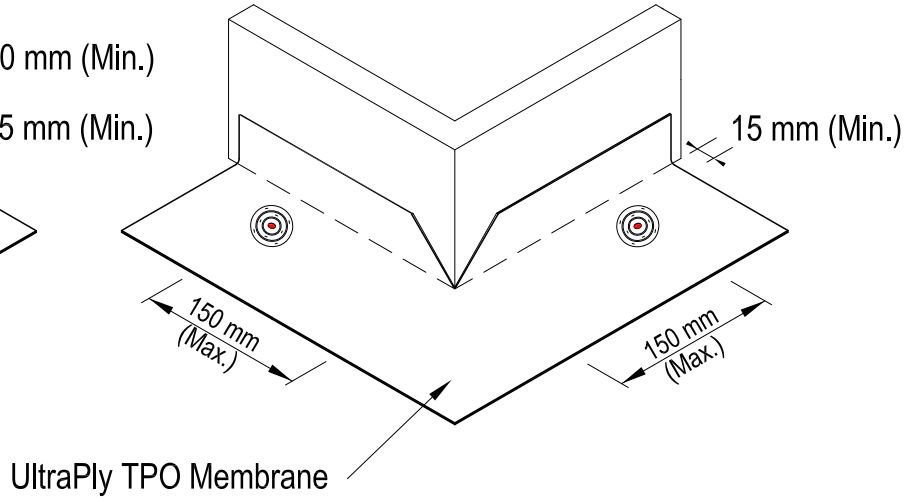


Note: Base Flashings and Terminations are not shown for clarity.
Refer to appropriate Termination & Base Tie-In details.

| | | | |
|---|---|---|---|
| Firestone<br>Firestone Building Products | **UltraPly TPO**<br>Base Tie-In at Outside Corner using HD Seam Plates | **No.:** T - BT - 6<br>05/2018 | **Systems**<br>All |

## Wall / Upstand Attachment

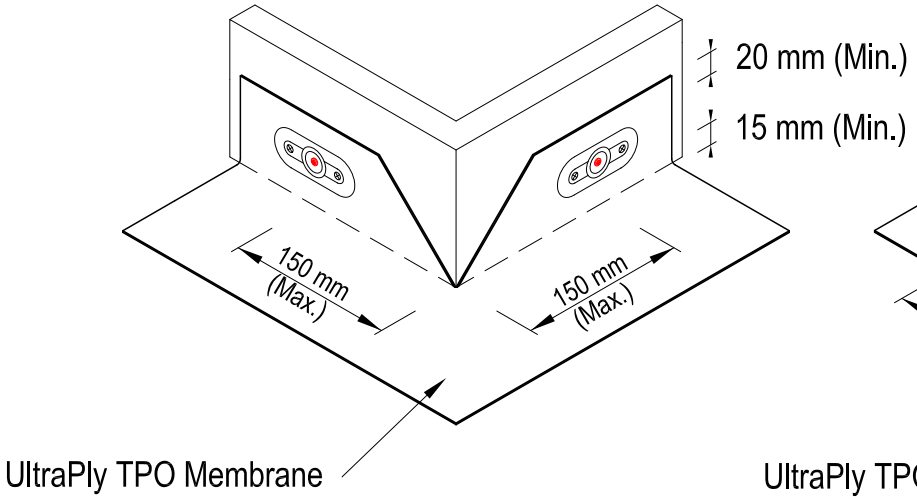


## Roof Deck Attachment

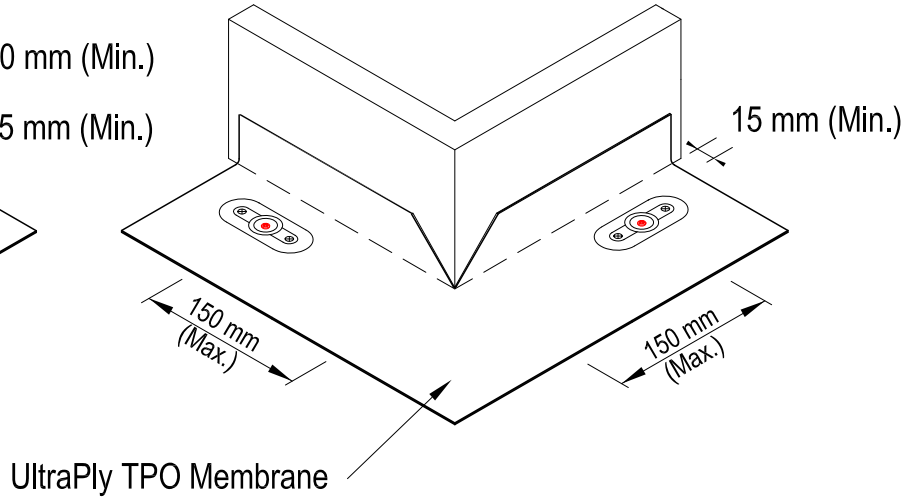


Note: Base Flashings and Terminations are not shown for clarity.
Refer to appropriate Termination & Base Tie-In details.

| | | | |
|---|---|---|---|
| Firestone<br>Firestone Building Products | **UltraPly TPO**<br>Base Tie-In at Outside Corner using non-Firestone Plates | **No.:** T - BT - 7<br>05/2018 | **Systems**<br>All |

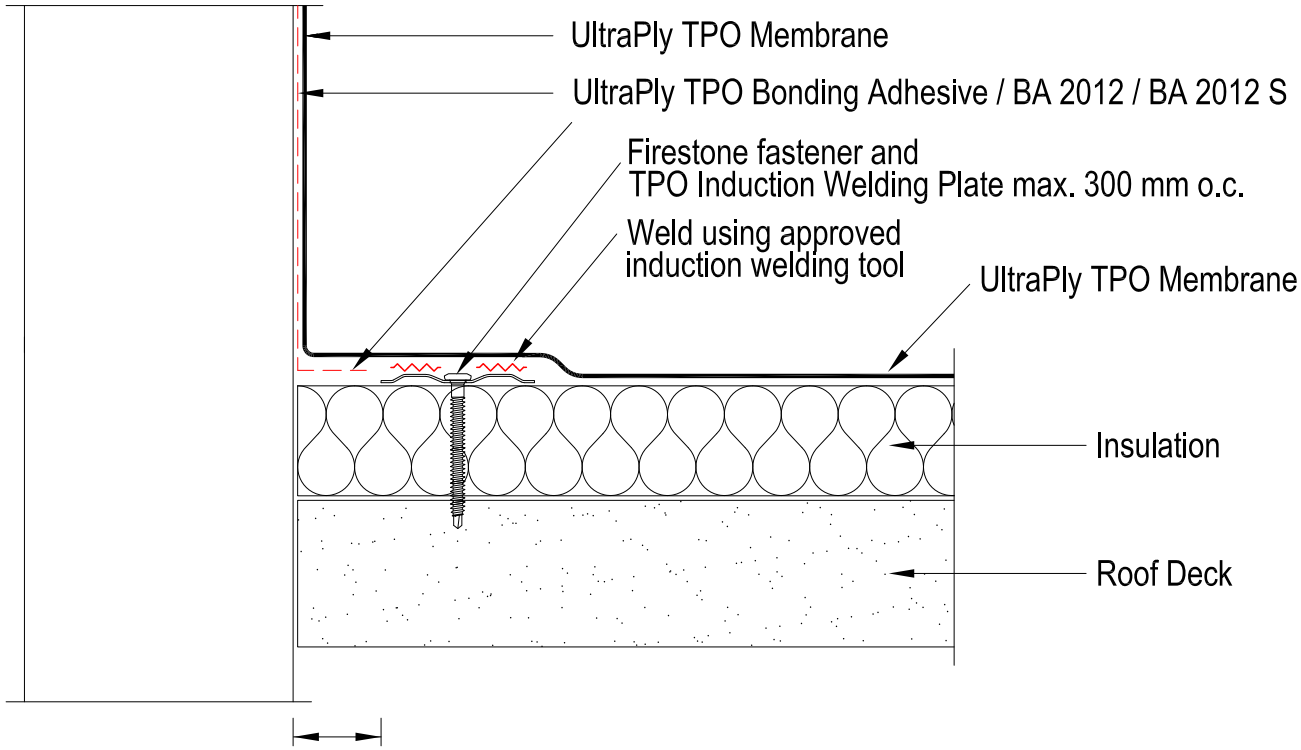


Induction Welding Plate must be at least 25 mm away
from angle-change but not more than 150 mm

| | | | |
|---|---|---|---|
| Firestone<br>Firestone Building Products | **UltraPly TPO**<br>Base Tie-In with TPO Induction Welding Plates<br>(Field membrane continues flashing upstand) | **No.:** T - BT - 8<br>05/2018 | **Systems**<br>Induction weld |

## 5.3 Corners

| | |
|---|---|
| T-C-1 | Outside corner using pre-molded UltraPly TPO corner piece |
| T-C-2 | Inside corner using pre-molded UltraPly TPO corner piece |
| T-C-3 | Inside corner with continuous wall flashing using pre-molded UltraPly TPO corner piece |
| T-C-4 | Field-fabricated inside corner with continuous wall flashing |
| T-C-5 | Field-fabricated inside corner |
| T-C-6 | Field-fabricated outside corner |
| T-C-7 | Field-fabricated outside corner with reinforcement patch |

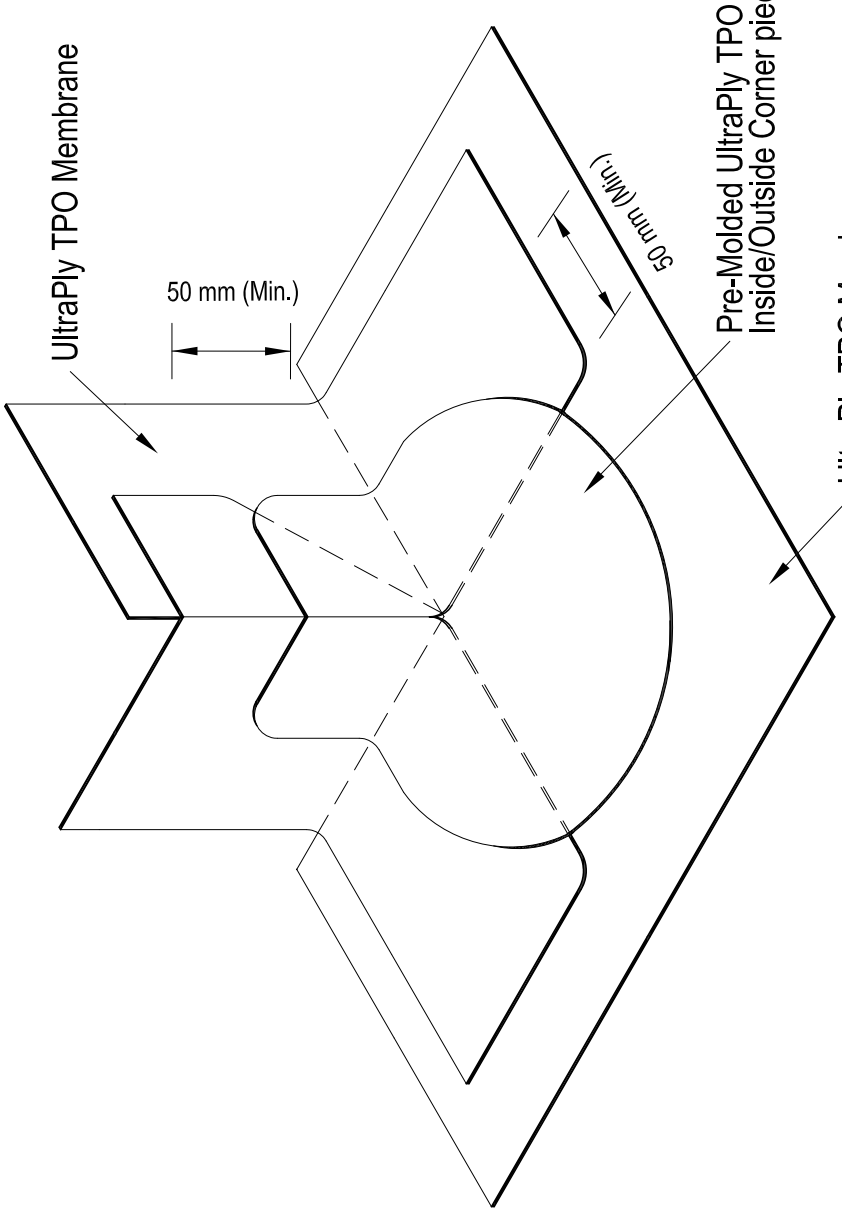


**Systems**
All

**No.:** T - C - 1

05/2018

**UltraPly TPO**
Outside Corner using Pre-Molded UltraPly TPO corner piece

Firestone
Firestone Building Products

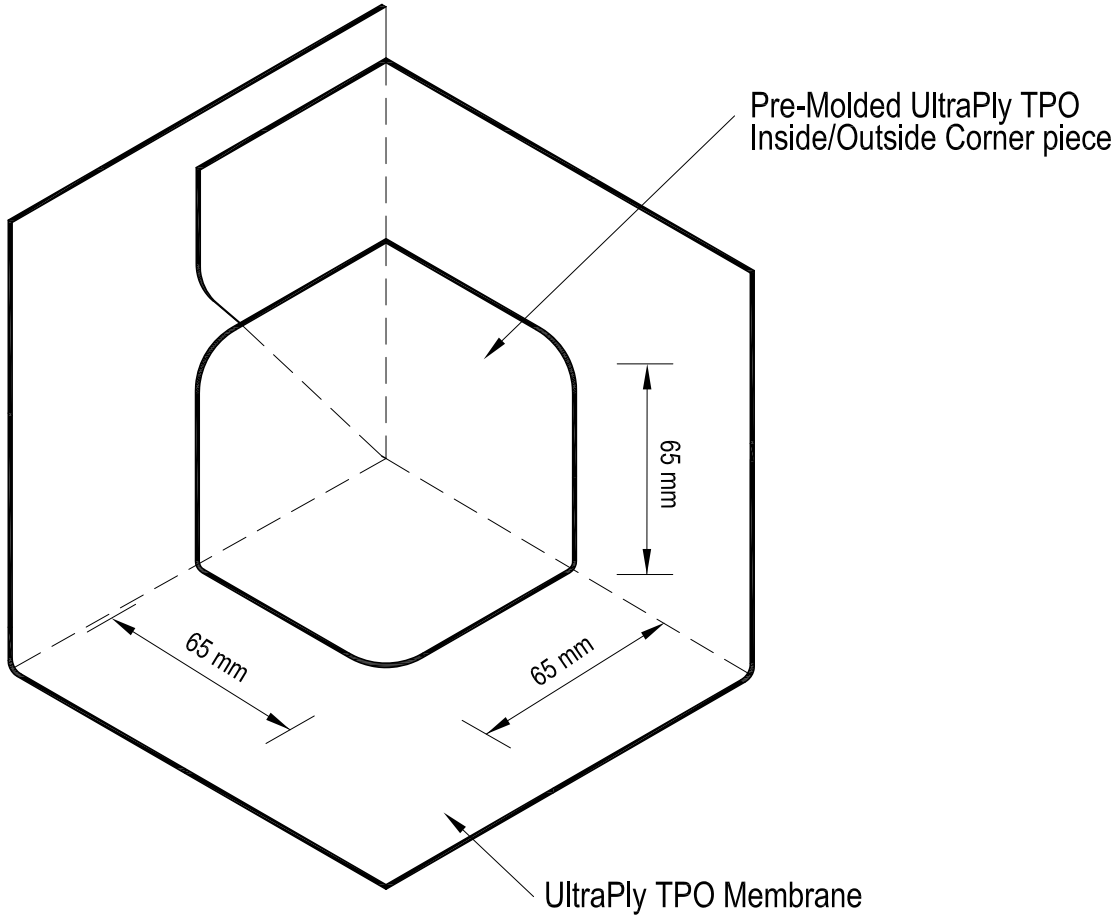


| | | | |
|---|---|---|---|
| Firestone<br>Firestone Building Products | **UltraPly TPO**<br>Inside Corner using Pre-Molded UltraPly TPO corner piece | **No.:** T - C - 2<br>05/2018 | **Systems**<br>All |

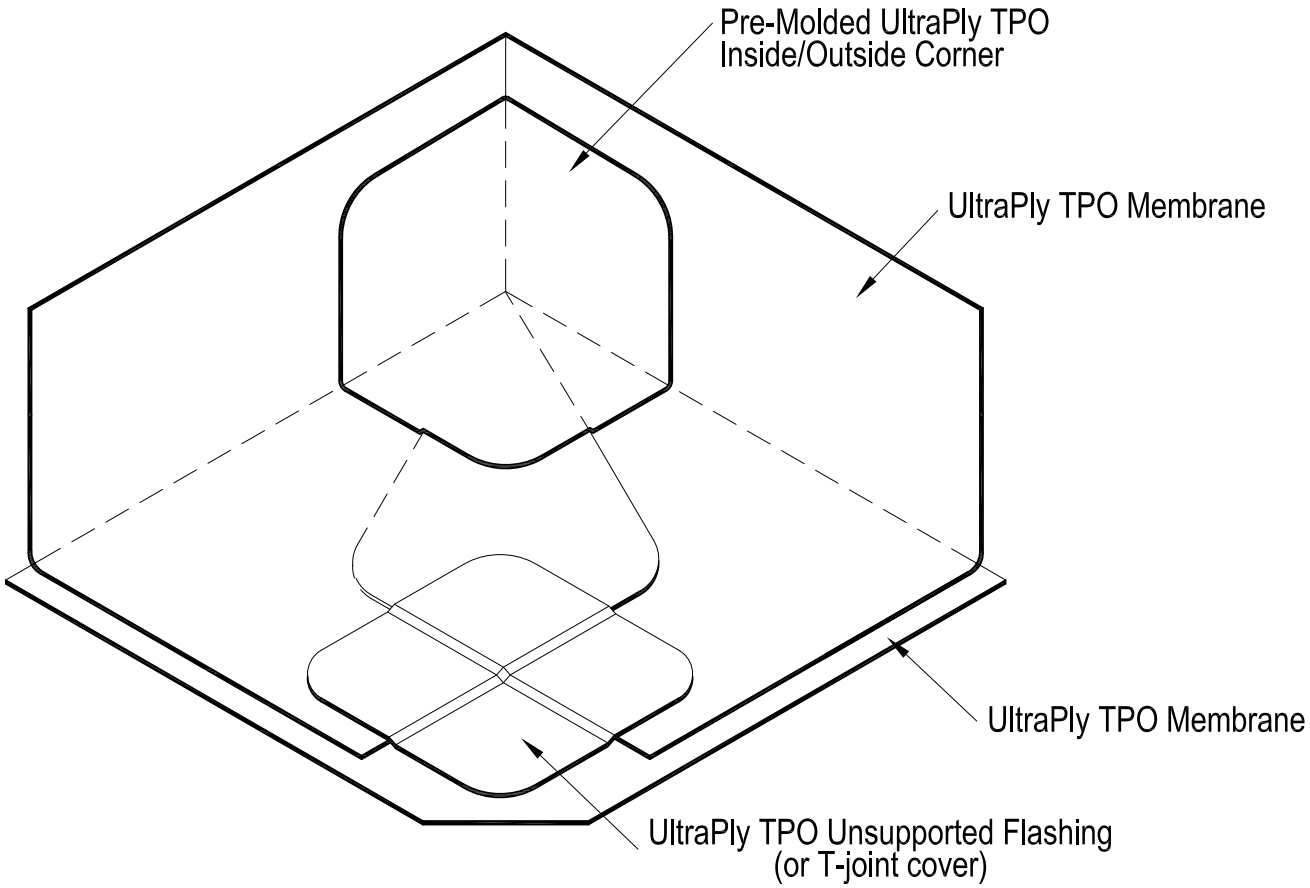


| | | | |
|---|---|---|---|
| Firestone<br>Firestone Building Products | **UltraPly TPO**<br>Inside Corner with Continuous Wall Flashing using Pre-Molded UltraPly TPO corner piece | **No.:** T - C - 3<br>05/2018 | **Systems**<br>All |

## STEP #1

UltraPly TPO Unsupported Flashing
to Field Fabricated Inside Corner

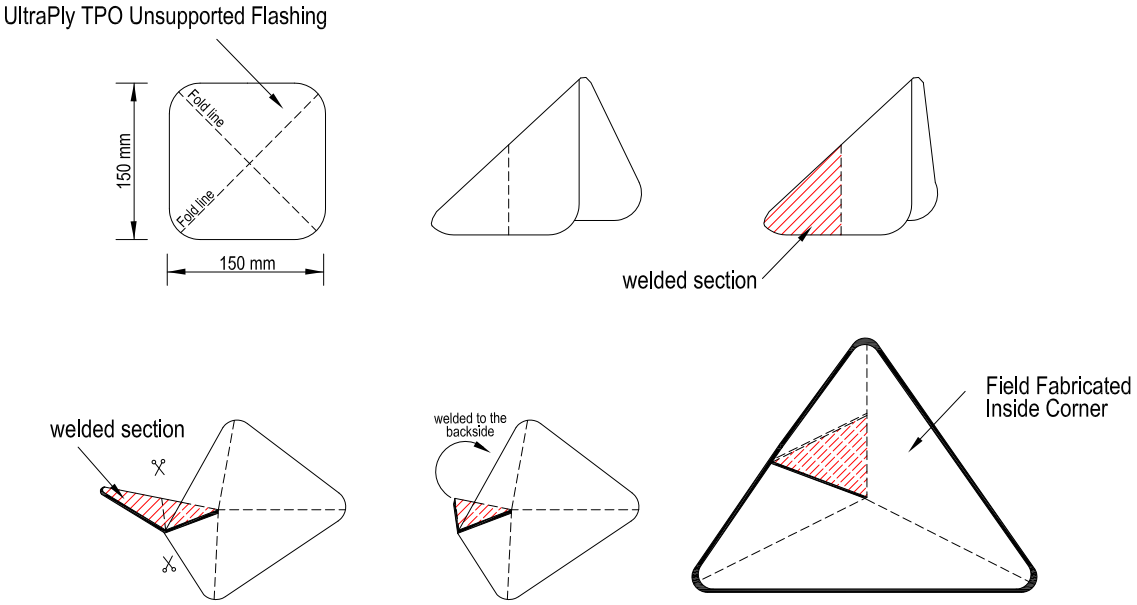


## STEP #2

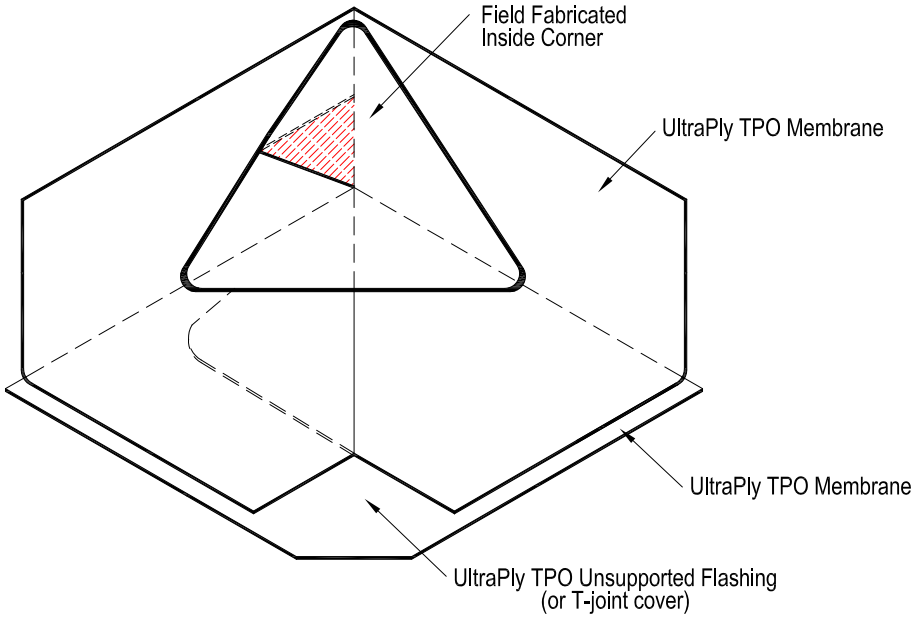


| | | | |
|---|---|---|---|
| Firestone<br>Firestone Building Products | **UltraPly TPO**<br>Field Fabricated Inside Corner with Continuous Wall Flashing | **No.:** T - C - 4<br>05/2018 | **Systems**<br>All |

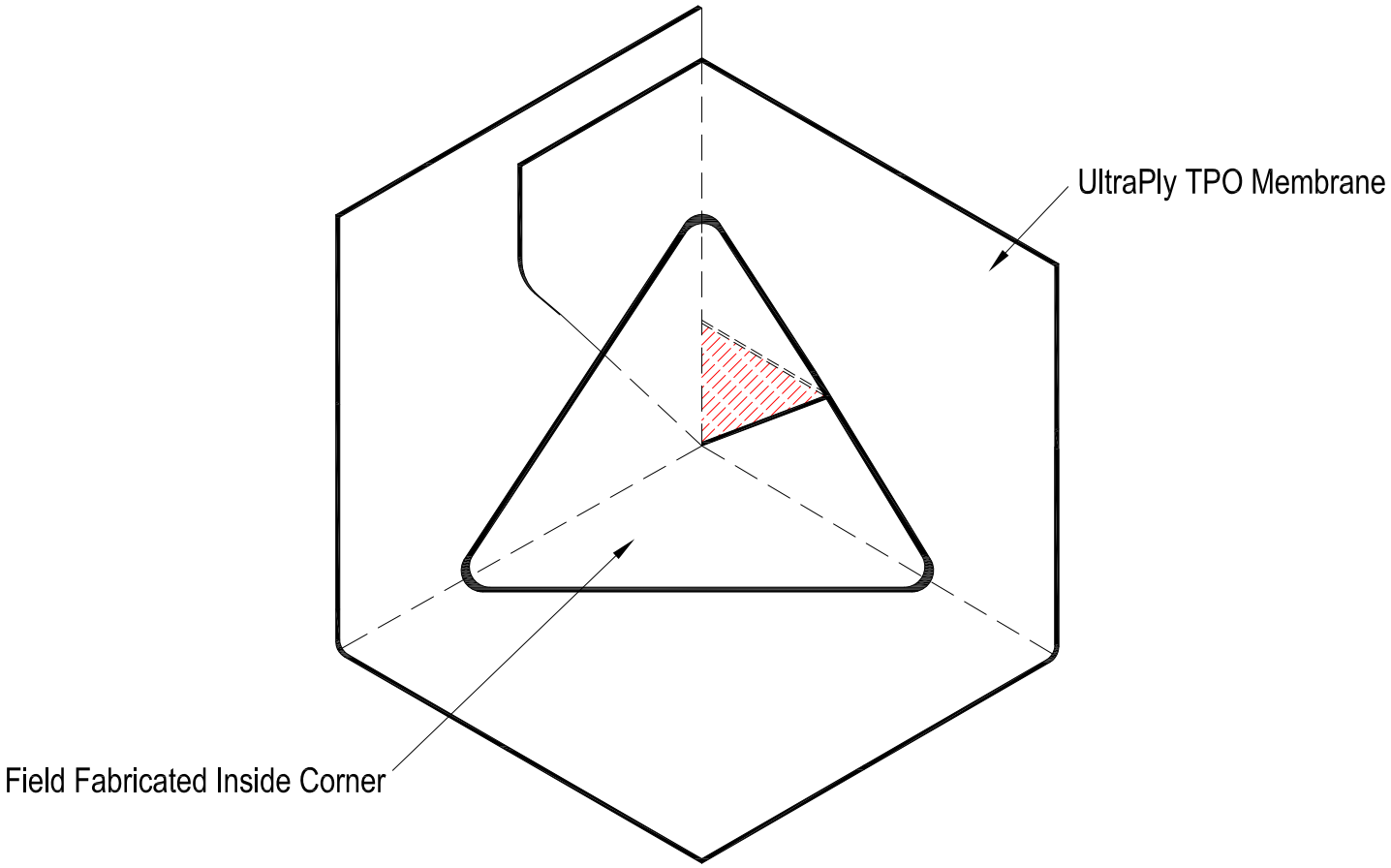


| | | | |
|---|---|---|---|
| Firestone<br>Firestone Building Products | **UltraPly TPO**<br>Field Fabricated Inside Corner | **No.:** T - C - 5<br>05/2018 | **Systems**<br>All |

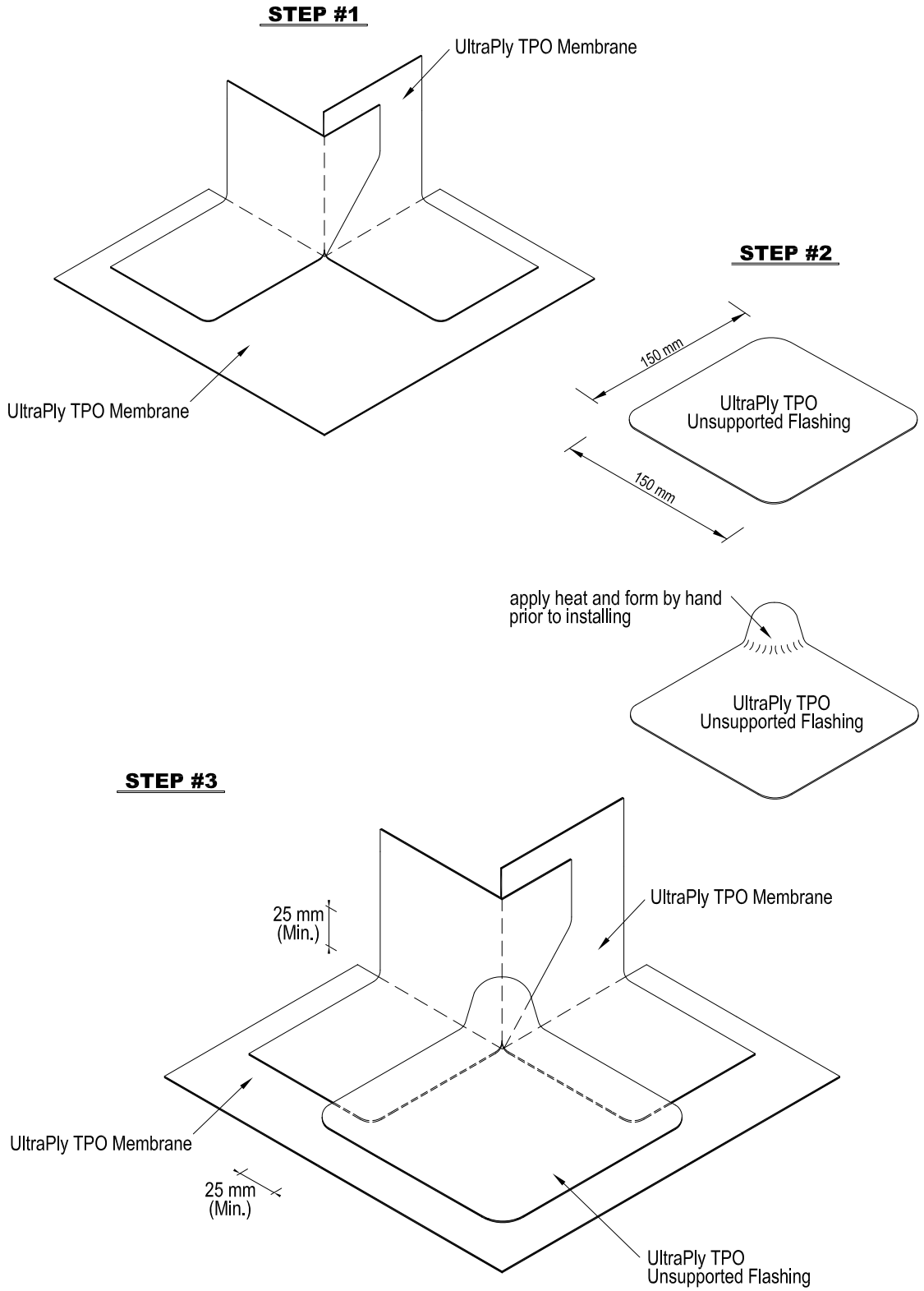


| Firestone<br>Firestone Building Products | UltraPly TPO<br>Field Fabricated<br>Outside Corner | No.: T - C - 6<br>05/2018 | Systems<br>All |
|---|---|---|---|

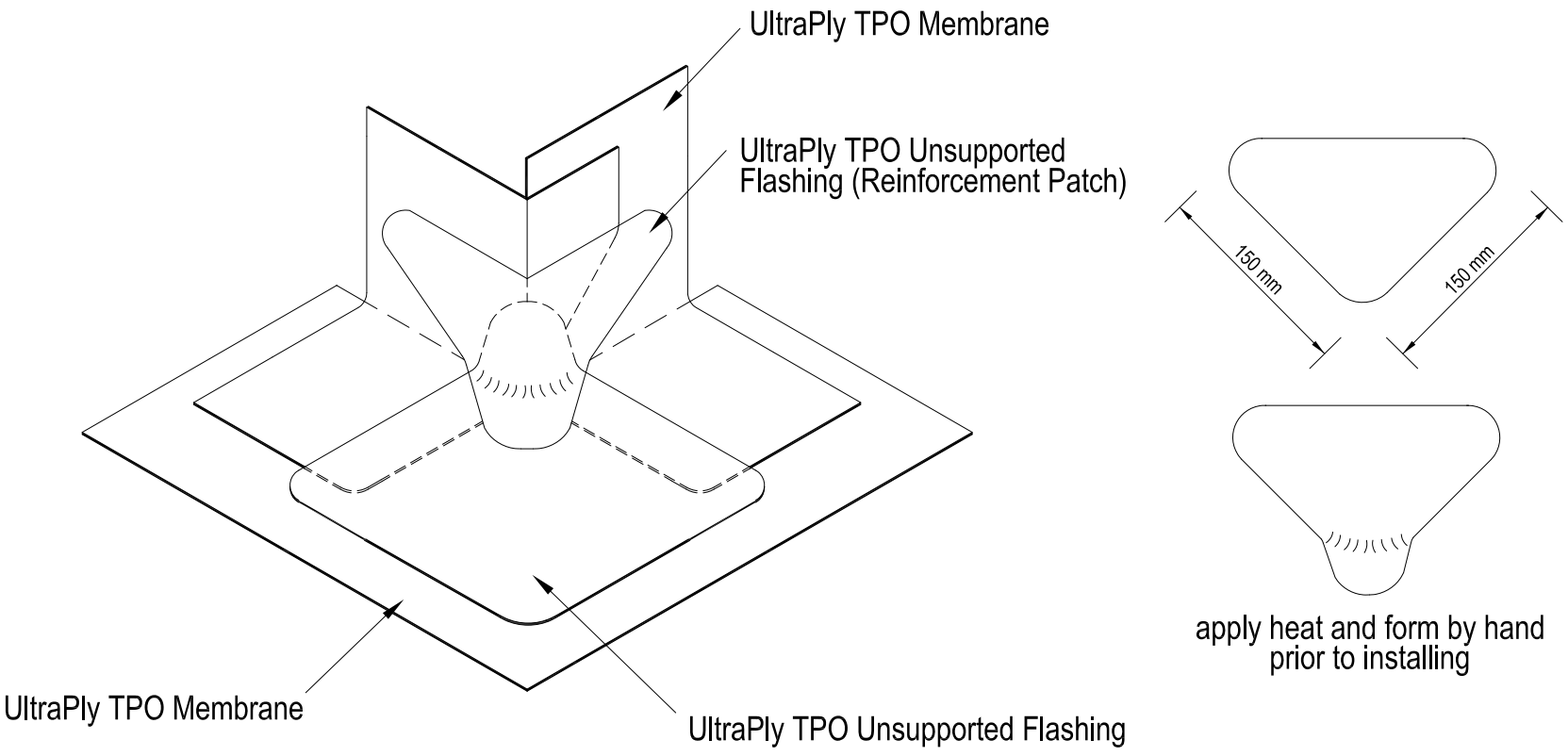


| | | | |
|---|---|---|---|
| Firestone<br>Firestone Building Products | **UltraPly TPO**<br>Field Fabricated Outside Corner with Reinforcement Patch | **No.:** T - C - 7<br>05/2018 | **Systems**<br>All |

## 5.4 Penetrations

| | |
|---|---|
| T-P-1 | Penetration with UltraPly TPO Pipe Flashing |
| T-P-2 | Penetration with UltraPly TPO Universal Pipe flashing |
| T-P-3 | Penetration with UltraPly TPO Unsupported Flashing |
| T-P-4 | Penetration with UltraPly TPO Unsupported Flashing (alternative method) |
| T-P-5 | Hot pipe penetration |
| T-P-6 | Penetration using TPO Penetration Pocket Kit |
| T-P-7 | Penetration pocket using UltraPly TPO Coated Metal |
| T-P-8 | Membrane securement layout at penetration (target patch) |
| T-P-9 | Membrane securement layout at penetration (cover strips) |

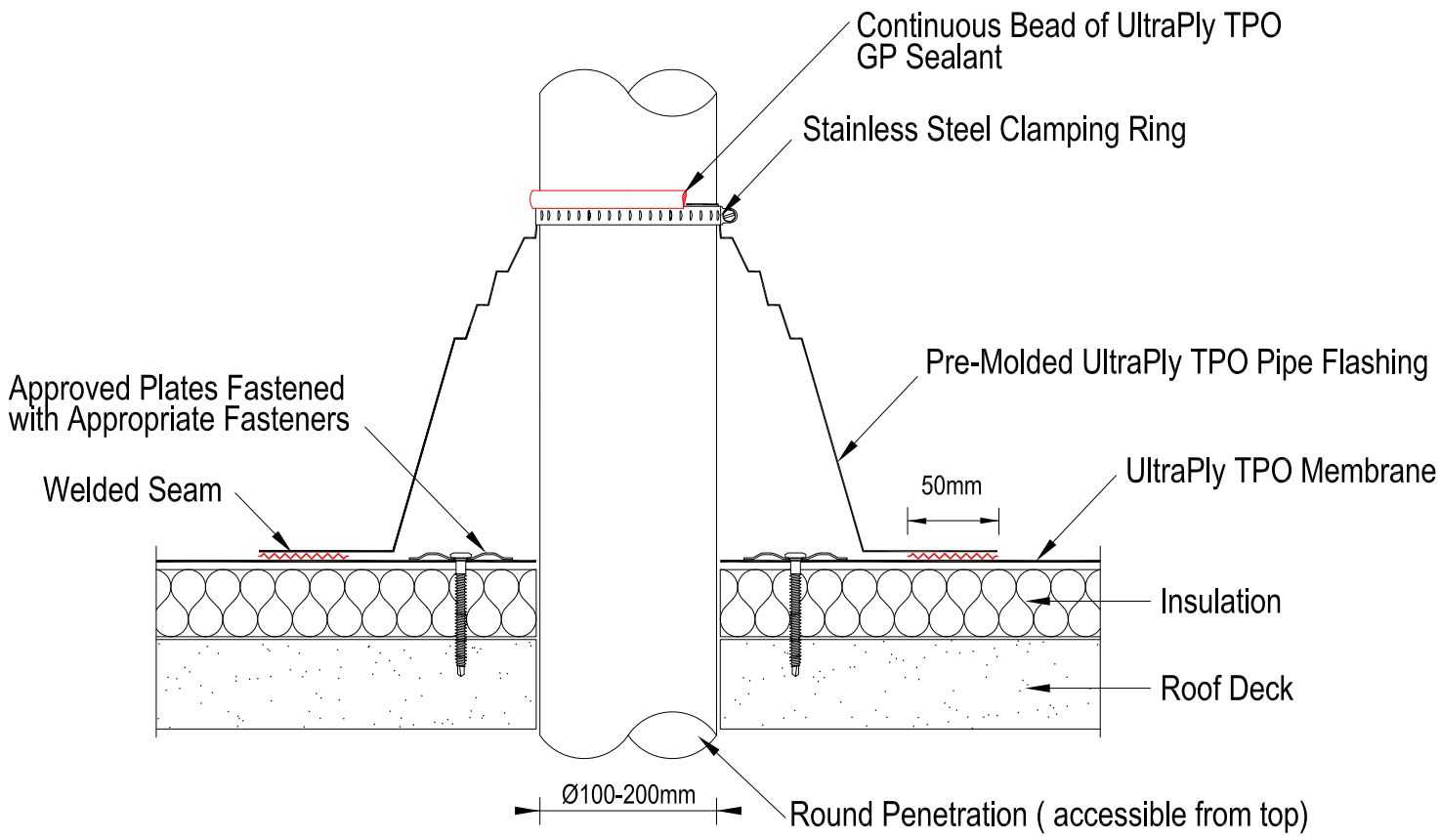


| | | | |
|---|---|---|---|
| Firestone<br>Firestone Building Products | **UltraPly TPO**<br>Penetration With UltraPly TPO Pipe Flashing | **No.:** T - P - 1<br>05/2018 | **Systems**<br>All |

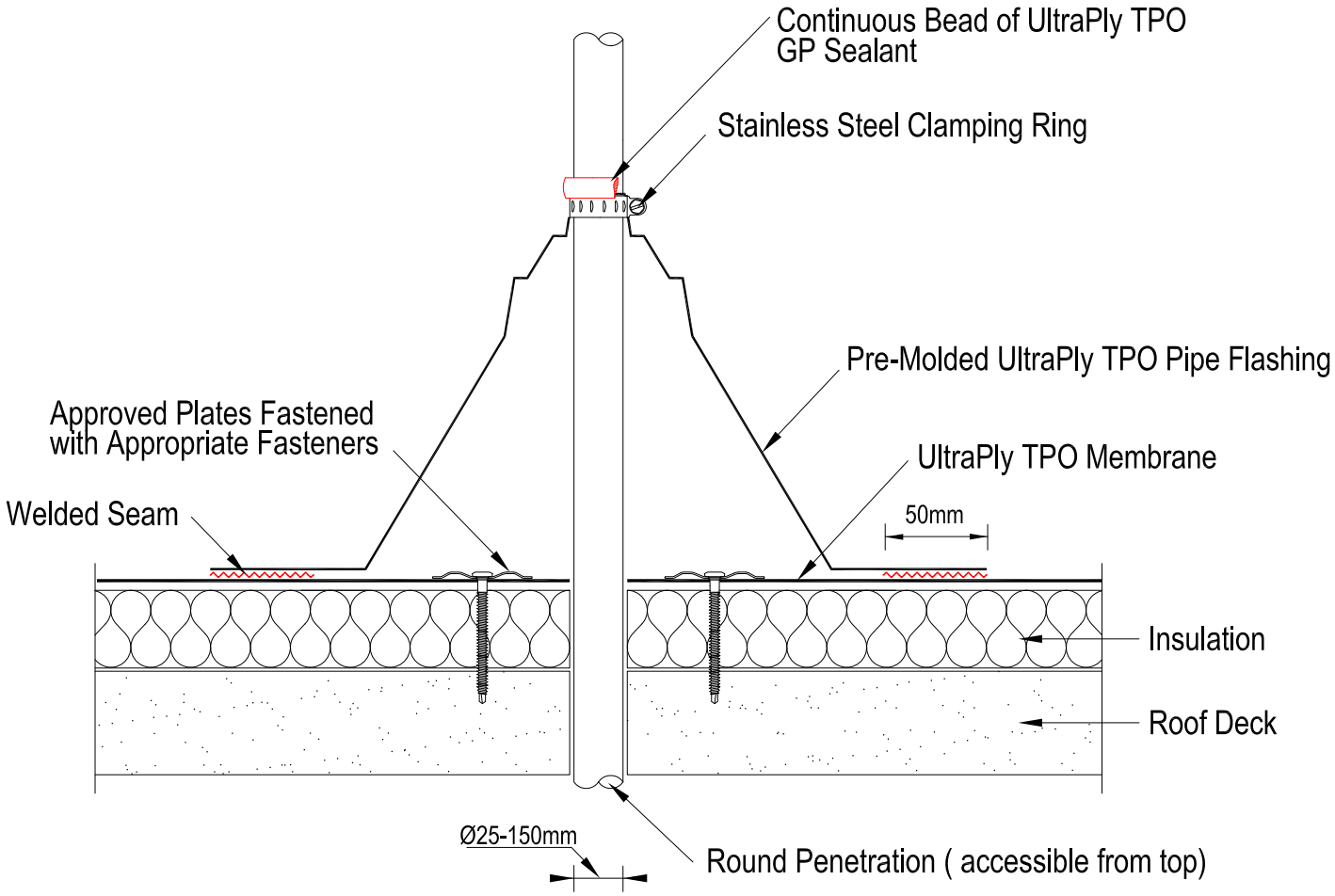


| | | | |
|---|---|---|---|
| Firestone<br>Firestone Building Products | **UltraPly TPO**<br>Penetration With UltraPly TPO Universal Pipe Flashing | **No.:** T - P - 2<br>05/2018 | **Systems**<br>All |

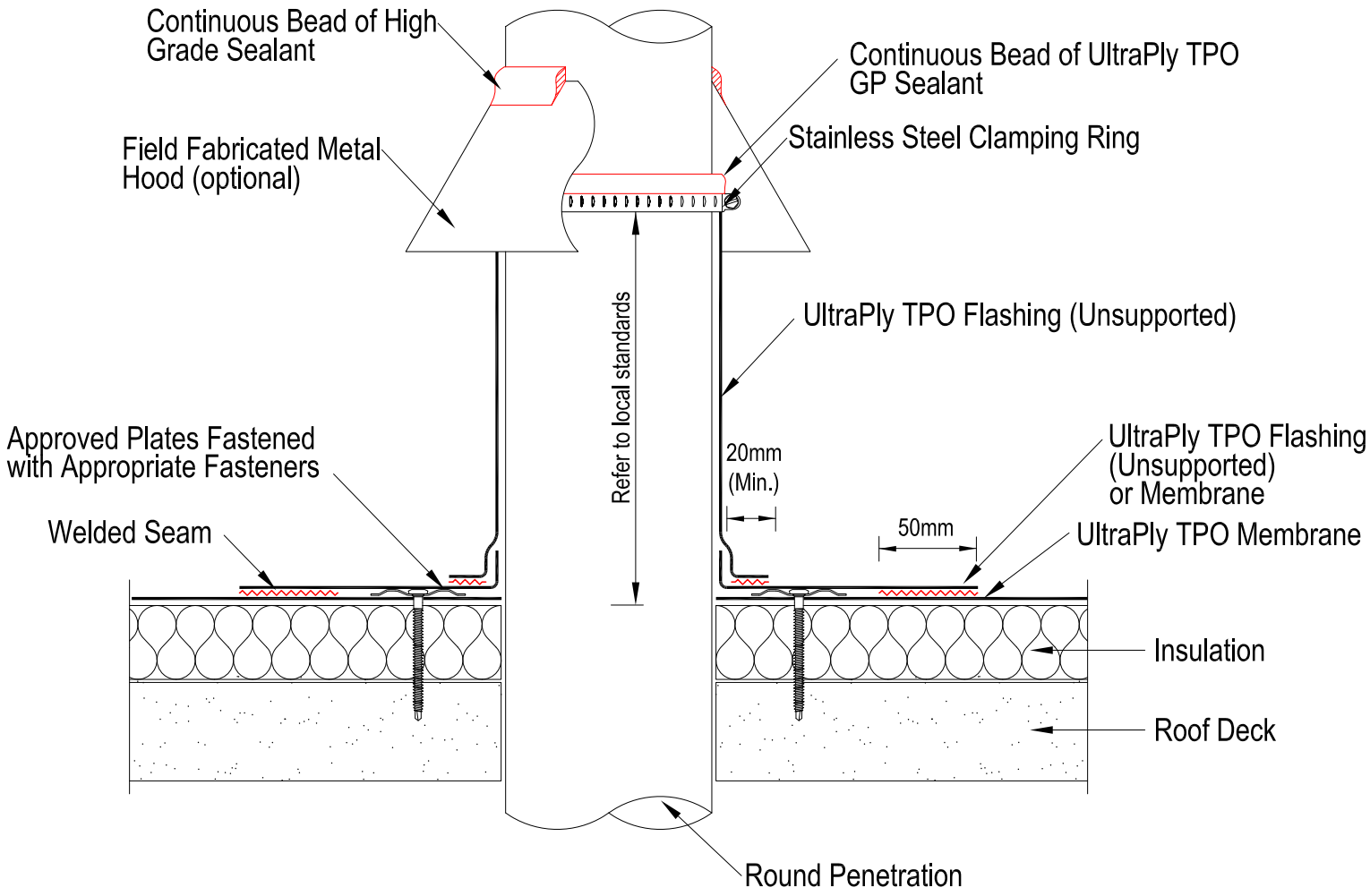


| | | | |
|---|---|---|---|
| Firestone<br>Firestone Building Products | **UltraPly TPO**<br>Penetration With UltraPly TPO Unsupported Flashing | **No.:** T - P - 3<br>05/2018 | **Systems**<br>All |

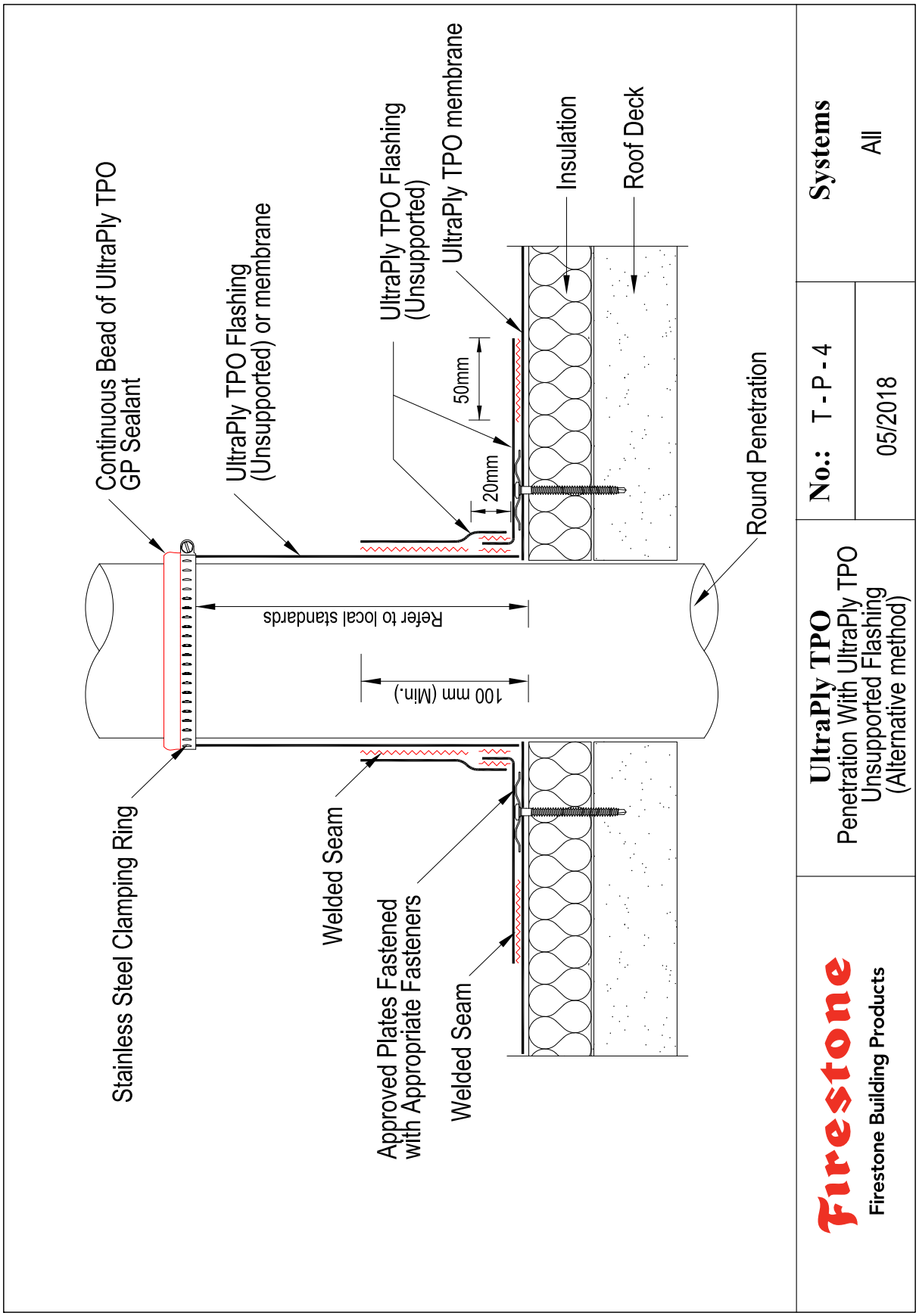
Continuous Bead of UltraPly TPO GP Sealant
UltraPly TPO Flashing (Unsupported) or membrane
UltraPly TPO Flashing (Unsupported)
UltraPly TPO membrane
Insulation
Roof Deck
50mm
20mm
Round Penetration
Refer to local standards
100 mm (Min.)
Stainless Steel Clamping Ring
Welded Seam
Approved Plates Fastened with Appropriate Fasteners
Welded Seam
Systems
All
No.: T - P - 4
05/2018
UltraPly TPO
Penetration With UltraPly TPO Unsupported Flashing (Alternative method)
Firestone
Firestone Building Products

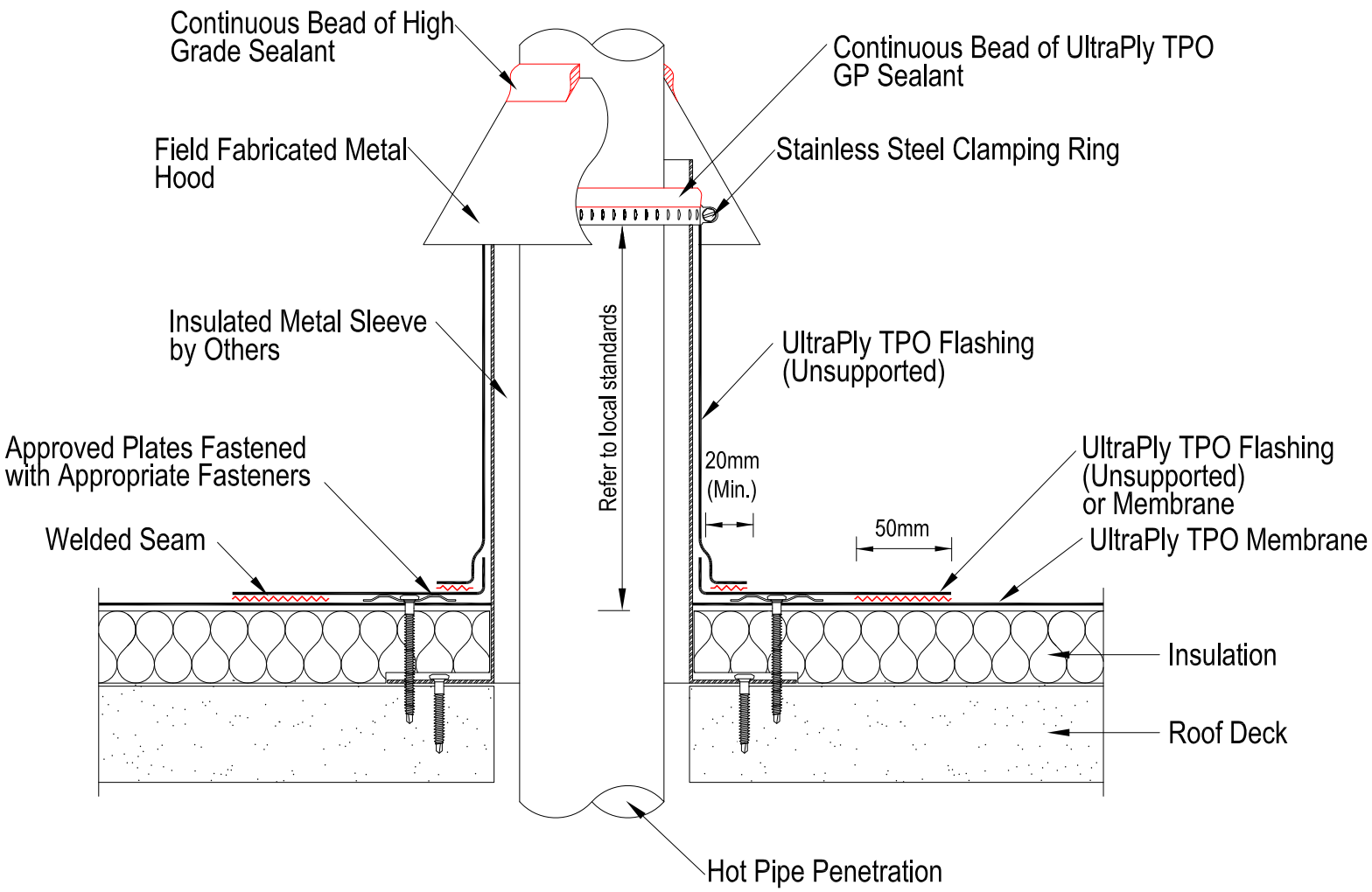


| | | | |
|---|---|---|---|
| Firestone<br>Firestone Building Products | **UltraPly TPO**<br>Hot Pipe Penetration | **No.:** T - P - 5<br>05/2018 | **Systems**<br>All |

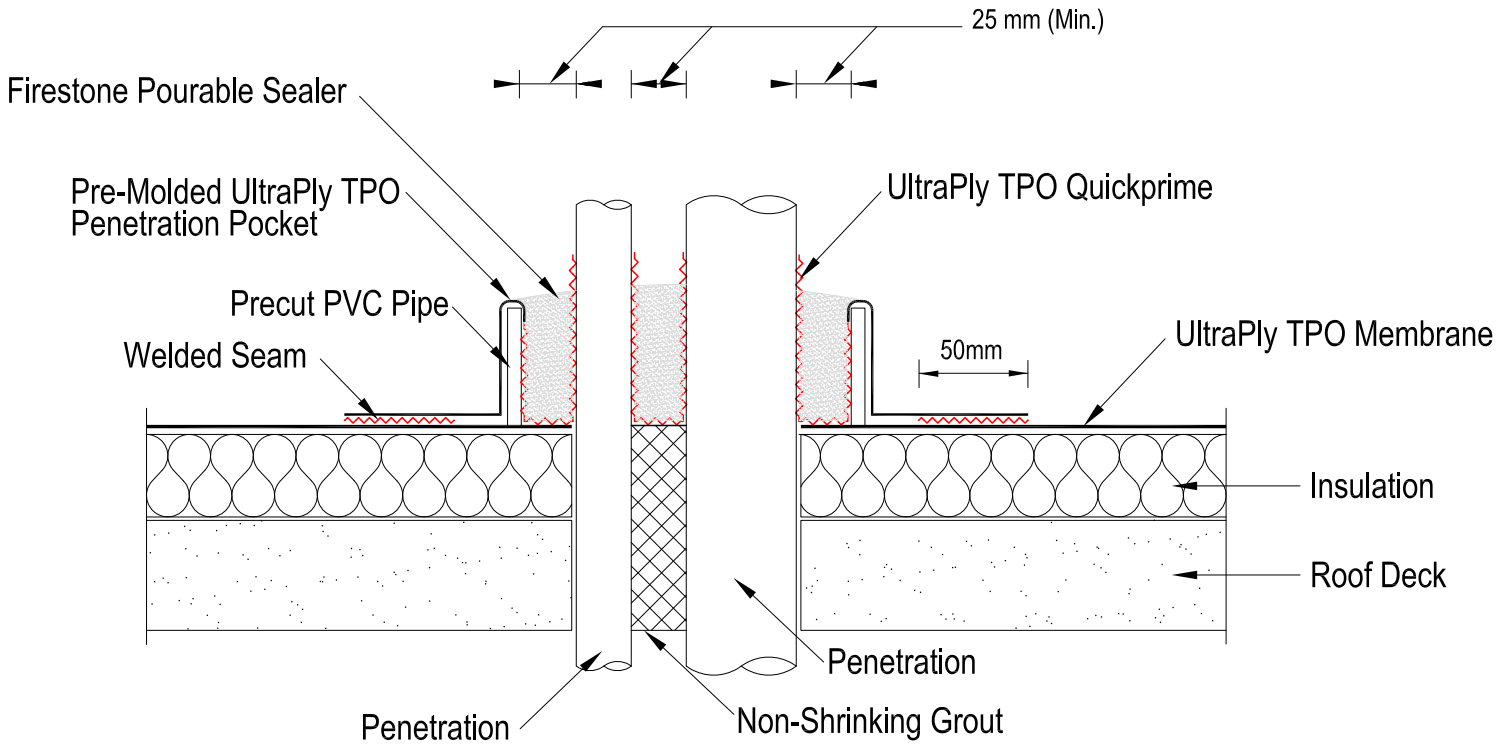


Note: Refer to T-P-8 Detail for appropriate Base Tie-In .

| | | | |
|---|---|---|---|
| Firestone<br>Firestone Building Products | **UltraPly TPO**<br>Penetration using TPO Penetration Pocket Kit | **No.:** T - P - 6<br>05/2018 | **Systems**<br>All |

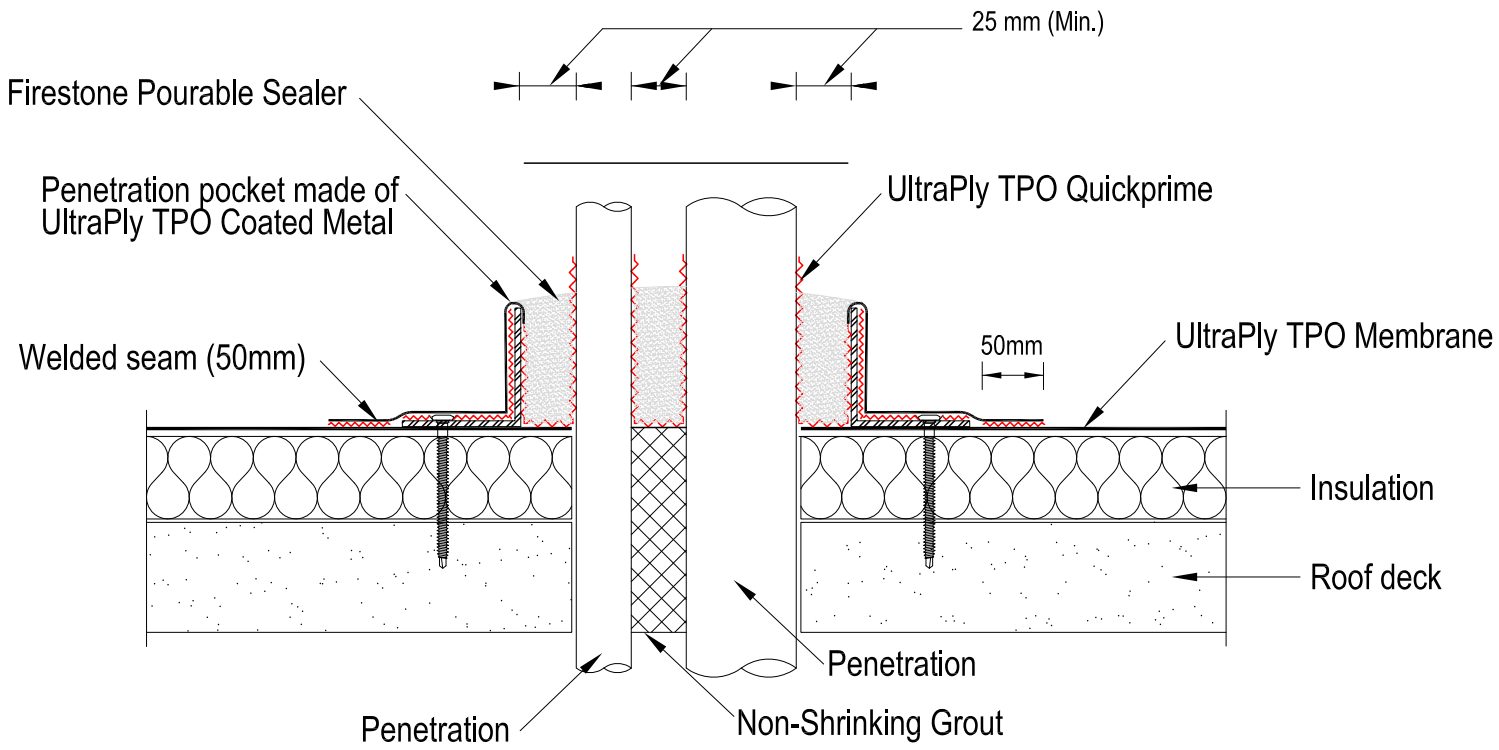


| | | | |
|---|---|---|---|
| Firestone<br>Firestone Building Products | **UltraPly TPO**<br>Penetration pocket using UltraPly TPO Coated Metal | **No.:** T - P - 7<br>05/2018 | **Systems**<br>All |

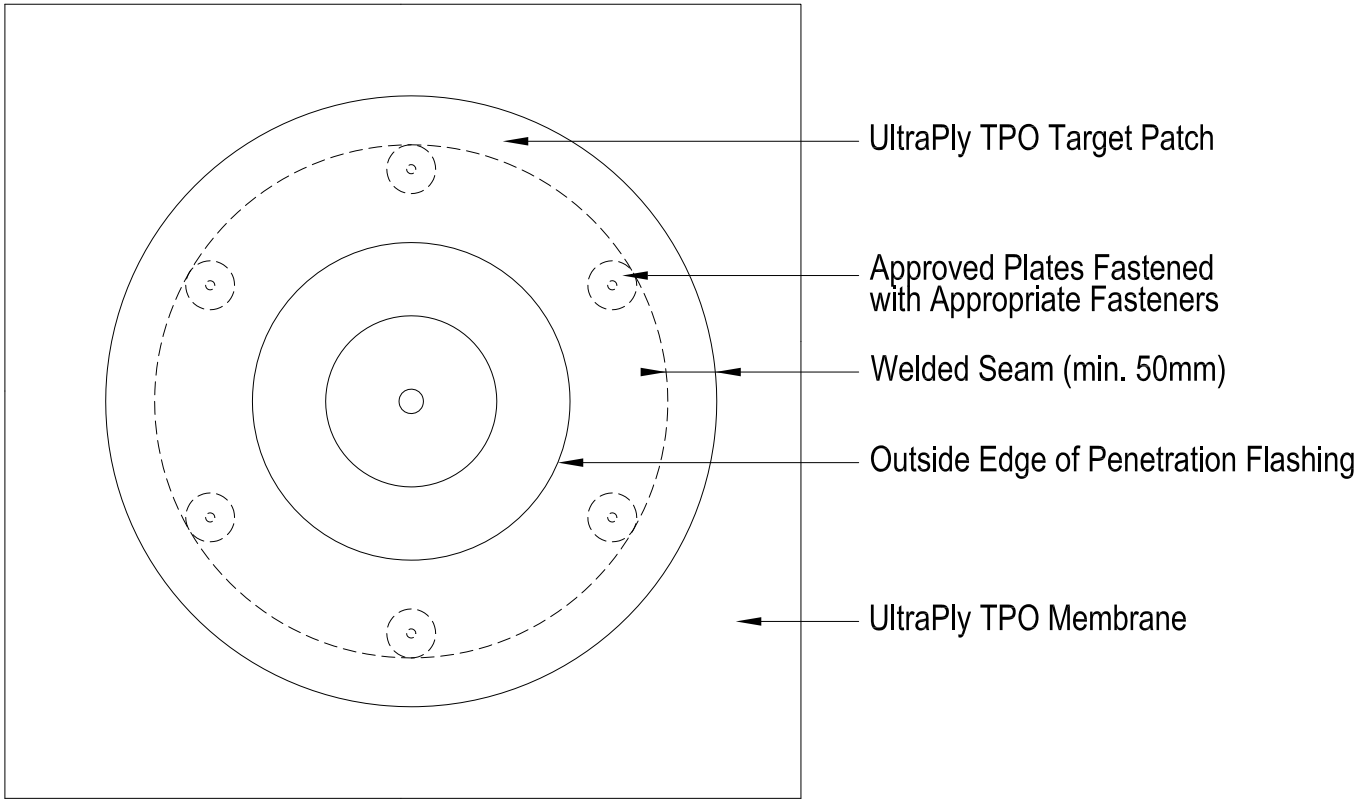


| | | | |
|---|---|---|---|
| Firestone<br>Firestone Building Products | **UltraPly TPO**<br>Membrane Securement Layout at Penetration (Target Patch) | **No.:** T - P - 8<br>05/2018 | **Systems**<br>All |

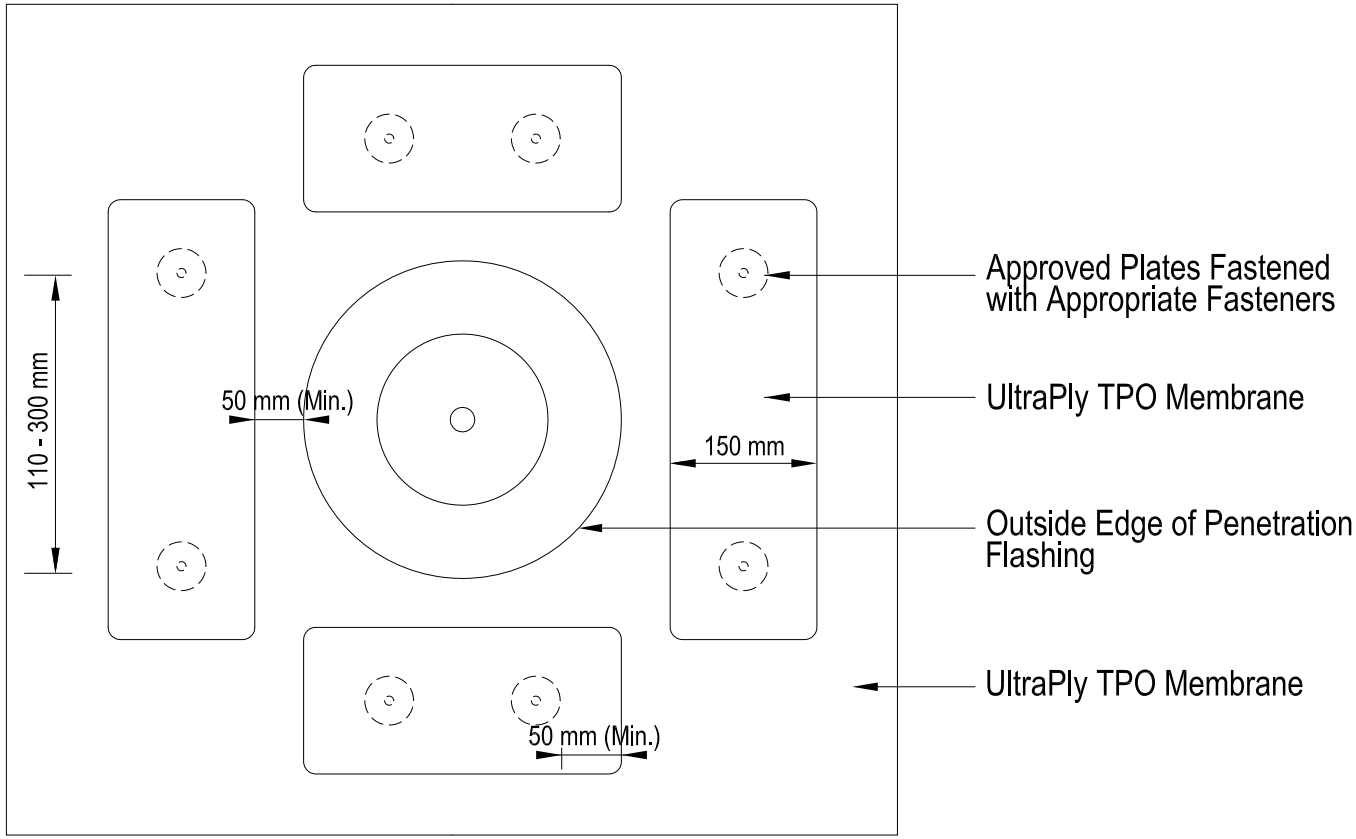


| | | | |
|---|---|---|---|
| Firestone<br>Firestone Building Products | **UltraPly TPO**<br>Membrane Securement Layout at Penetration (Cover Strips) | **No.:** T - P - 9<br>05/2018 | **Systems**<br>All |

## 5.5 Drains

| | |
|---|---|
| T-D-1 | Drain using TPO pre-molded insert piece |
| T-D-2 | Drain using insert piece with UltraPly TPO membrane laminated to flange |
| T-D-3 | Drain with clamping ring |
| T-D-4 | TPO pre-molded scupper |

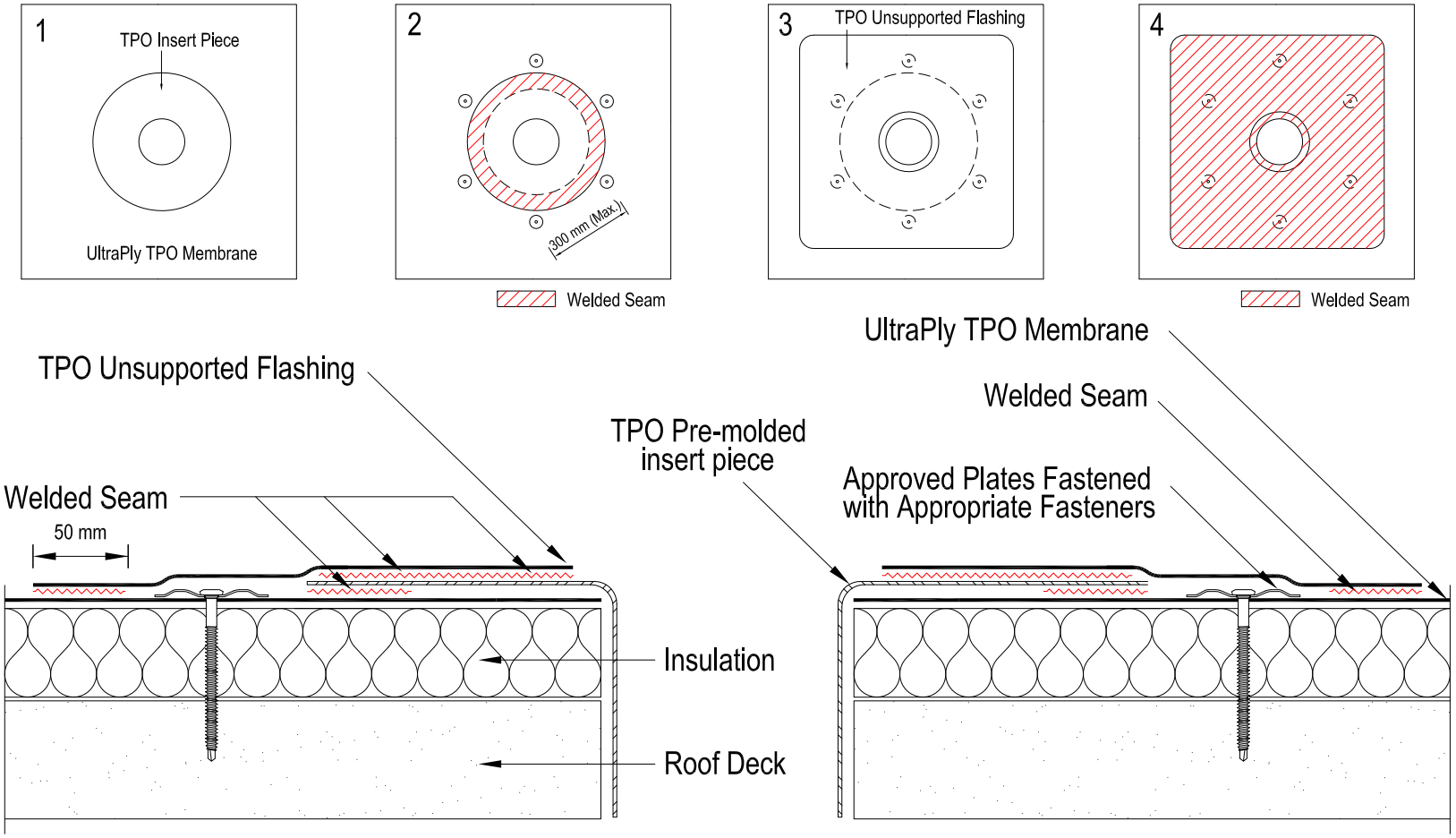


| | | | |
|---|---|---|---|
| Firestone<br>Firestone Building Products | **UltraPly TPO**<br>Drain using TPO<br>Pre-molded insert piece | **No.:** T - D - 1<br>05/2018 | **Systems**<br>All |

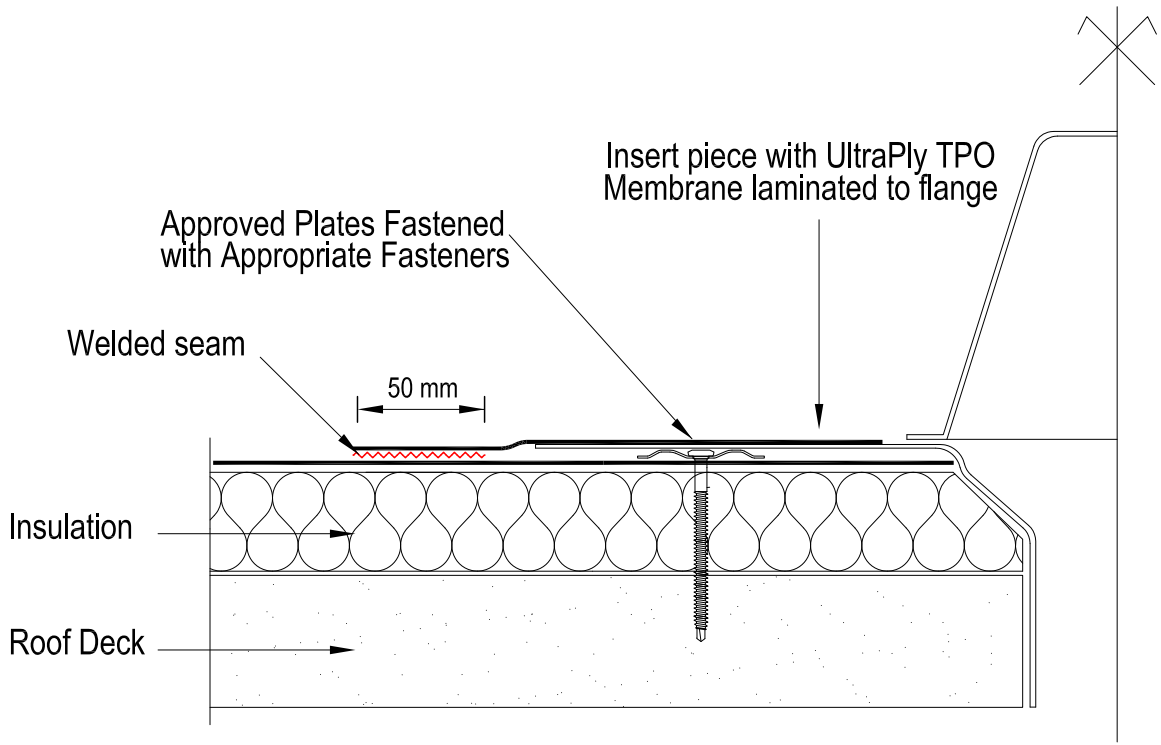


Note: A bead of Cut Edge Sealant is required.

| | | | |
|---|---|---|---|
| Firestone<br>Firestone Building Products | **UltraPly TPO**<br>Drain using Insert piece with UltraPly TPO Membrane laminated to flange | **No.:** T - D - 2<br>05/2018 | **Systems**<br>All |

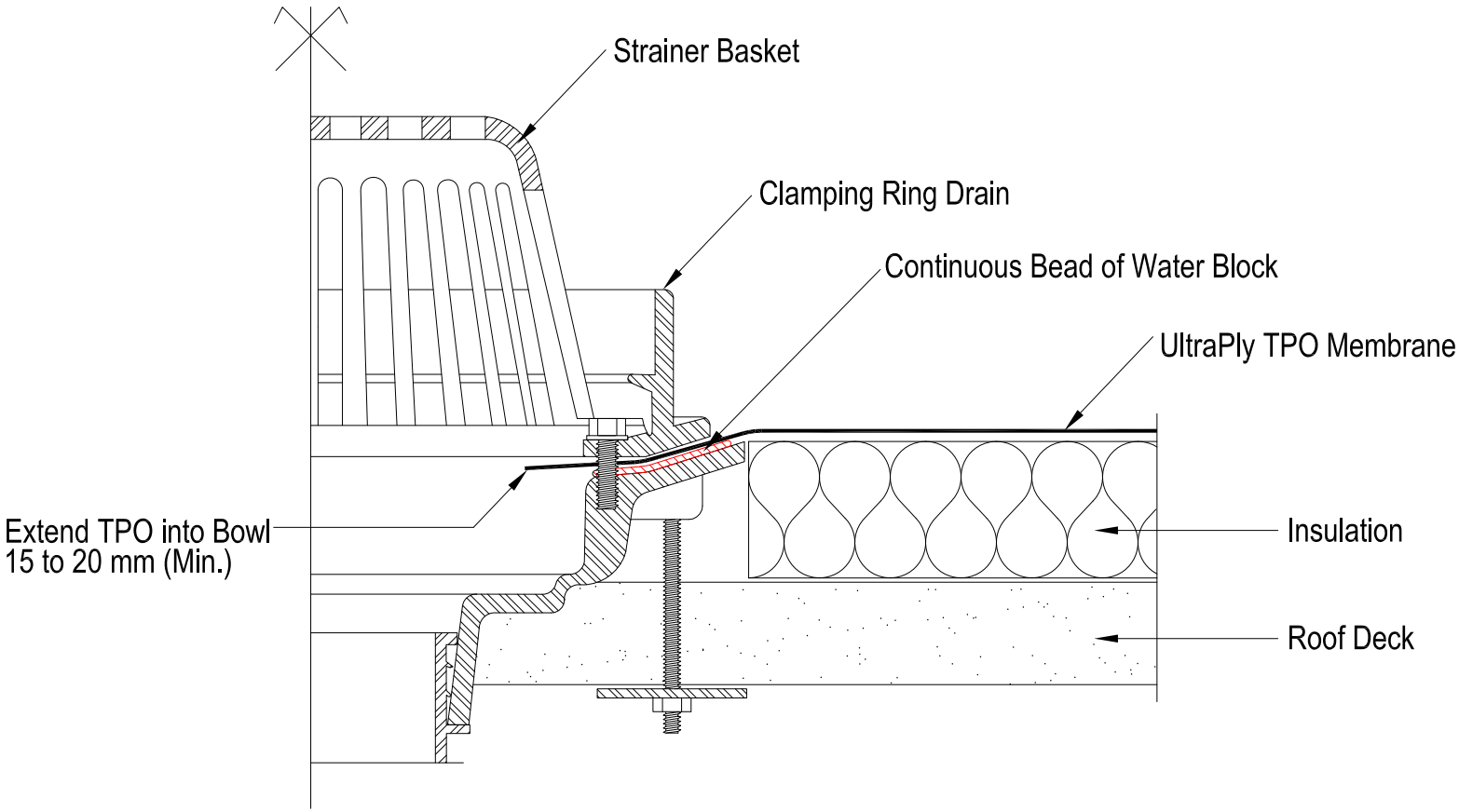


Note: Maximum slope to Drain is 1:12.

| | | | |
|---|---|---|---|
| Firestone<br>Firestone Building Products | **UltraPly TPO**<br>Drain with Clamping Ring | **No.:** T - D - 3<br>05/2018 | **Systems**<br>All |

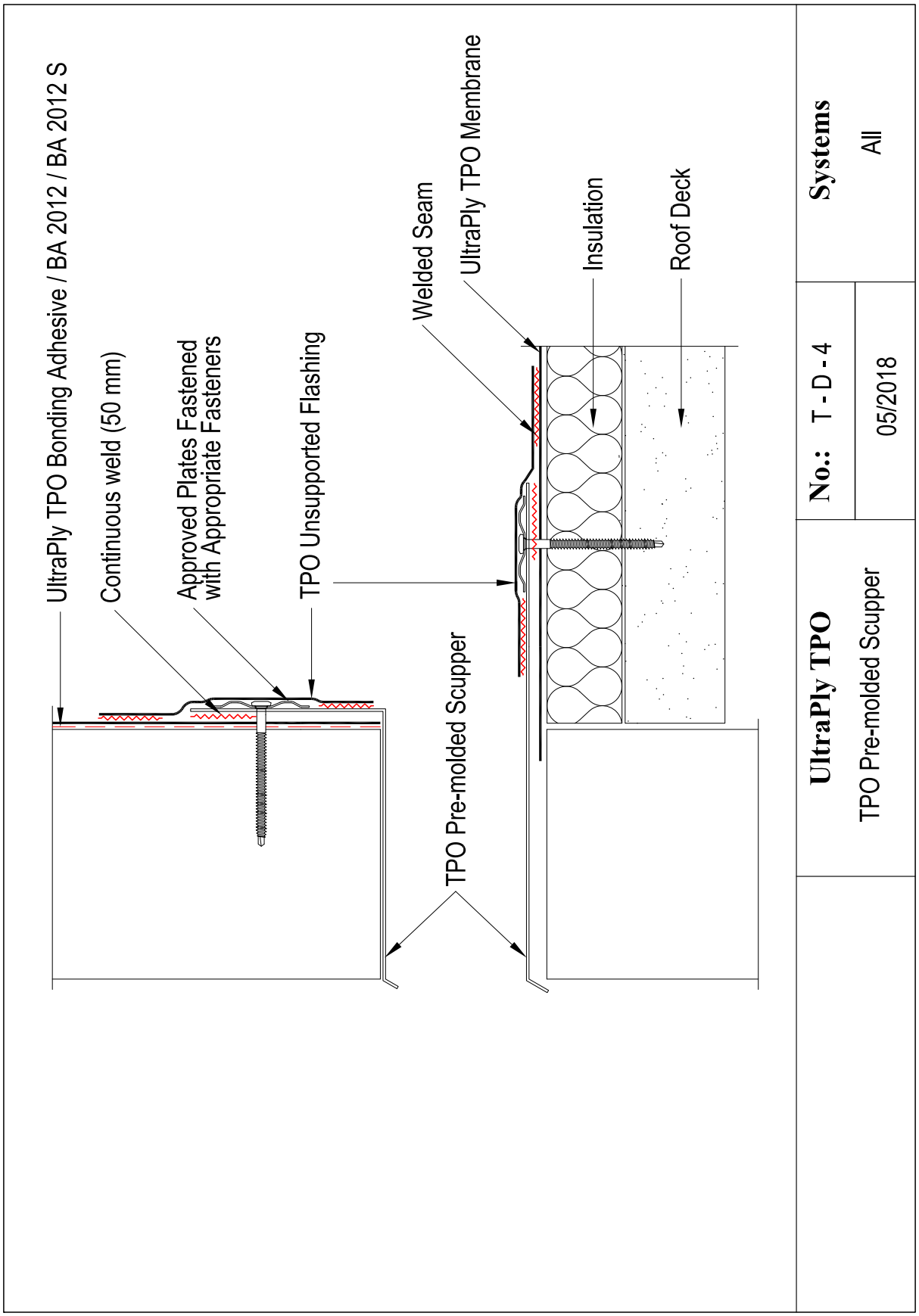
UltraPly TPO Bonding Adhesive / BA 2012 / BA 2012 S
Continuous weld (50 mm)
Approved Plates Fastened with Appropriate Fasteners
TPO Unsupported Flashing
Welded Seam
UltraPly TPO Membrane
Insulation
Roof Deck
TPO Pre-molded Scupper
UltraPly TPO
TPO Pre-molded Scupper
No.: T - D - 4
05/2018
Systems
All

## 5.6 Expansion joints

| | |
|---|---|
| T-E-1 | Flat expansion joint |
| T-E-2 | Raised expansion joint |
| T-E-3 | Raised expansion joint with metal joint cover |
| T-E-4 | Wall expansion joint |

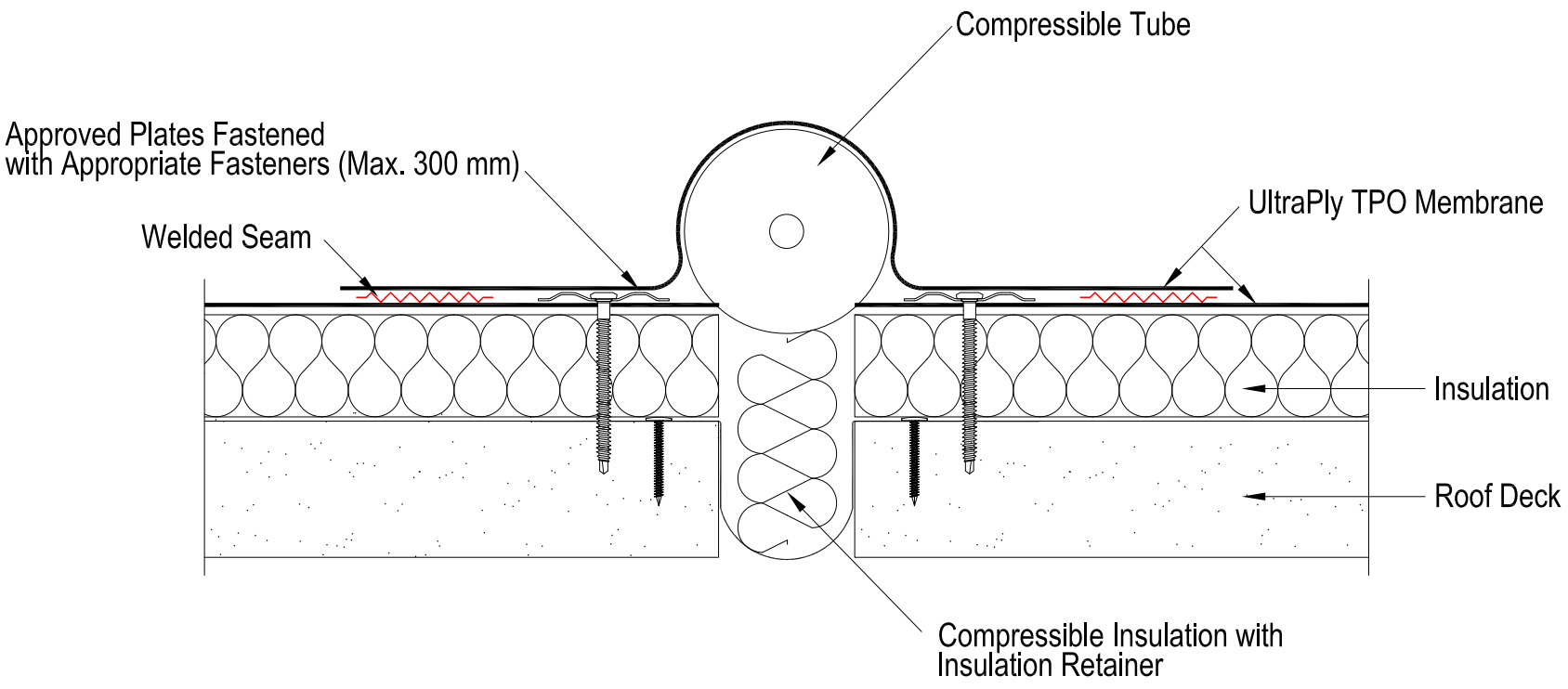


| | | | |
|---|---|---|---|
| Firestone<br>Firestone Building Products | **UltraPly TPO**<br>Flat Expansion Joint | **No.:** T - E - 1<br>05/2018 | **Systems**<br>All |

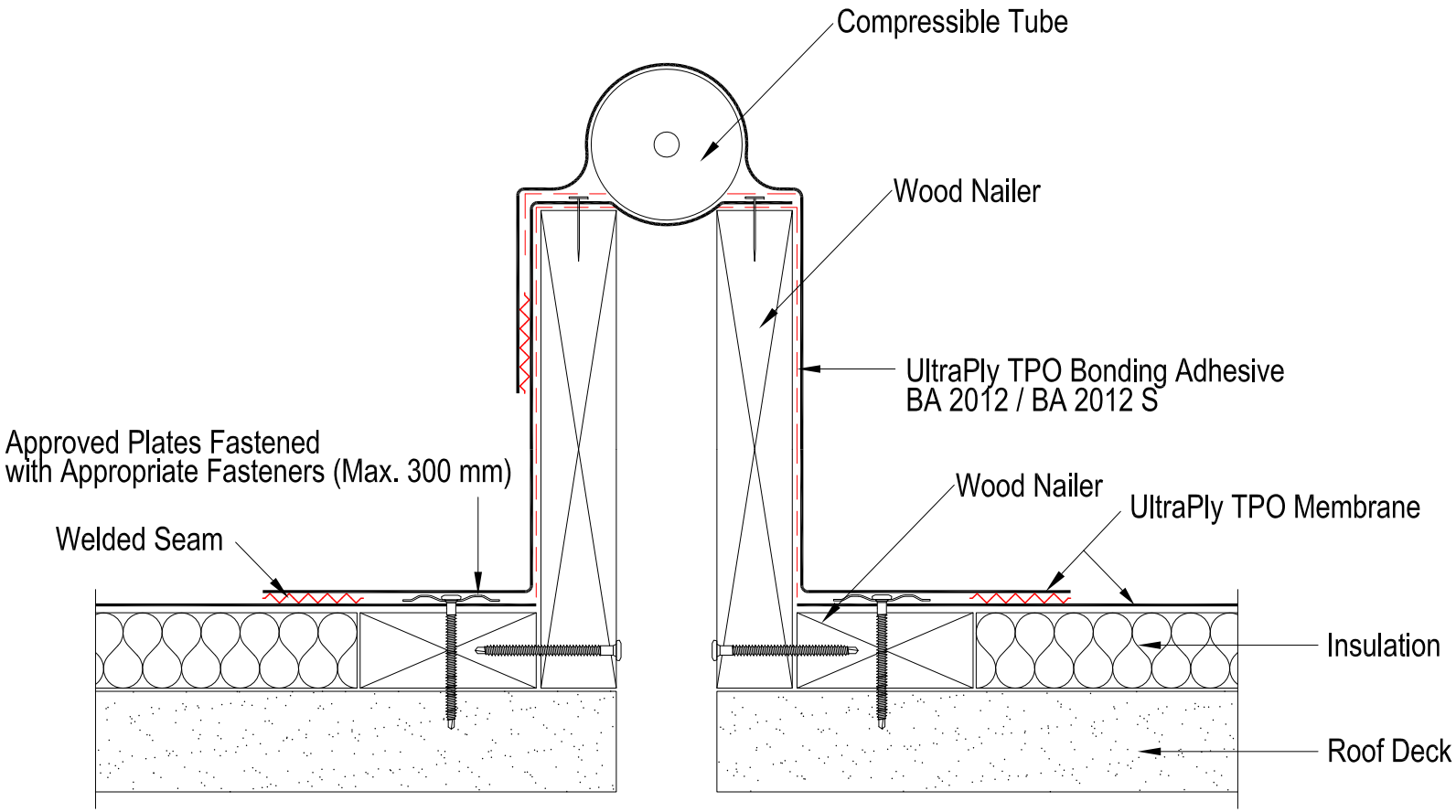


| | | | |
|---|---|---|---|
| Firestone<br>Firestone Building Products | **UltraPly TPO**<br>Raised Expansion Joint | **No.:** T - E - 2<br>05/2018 | **Systems**<br>All |

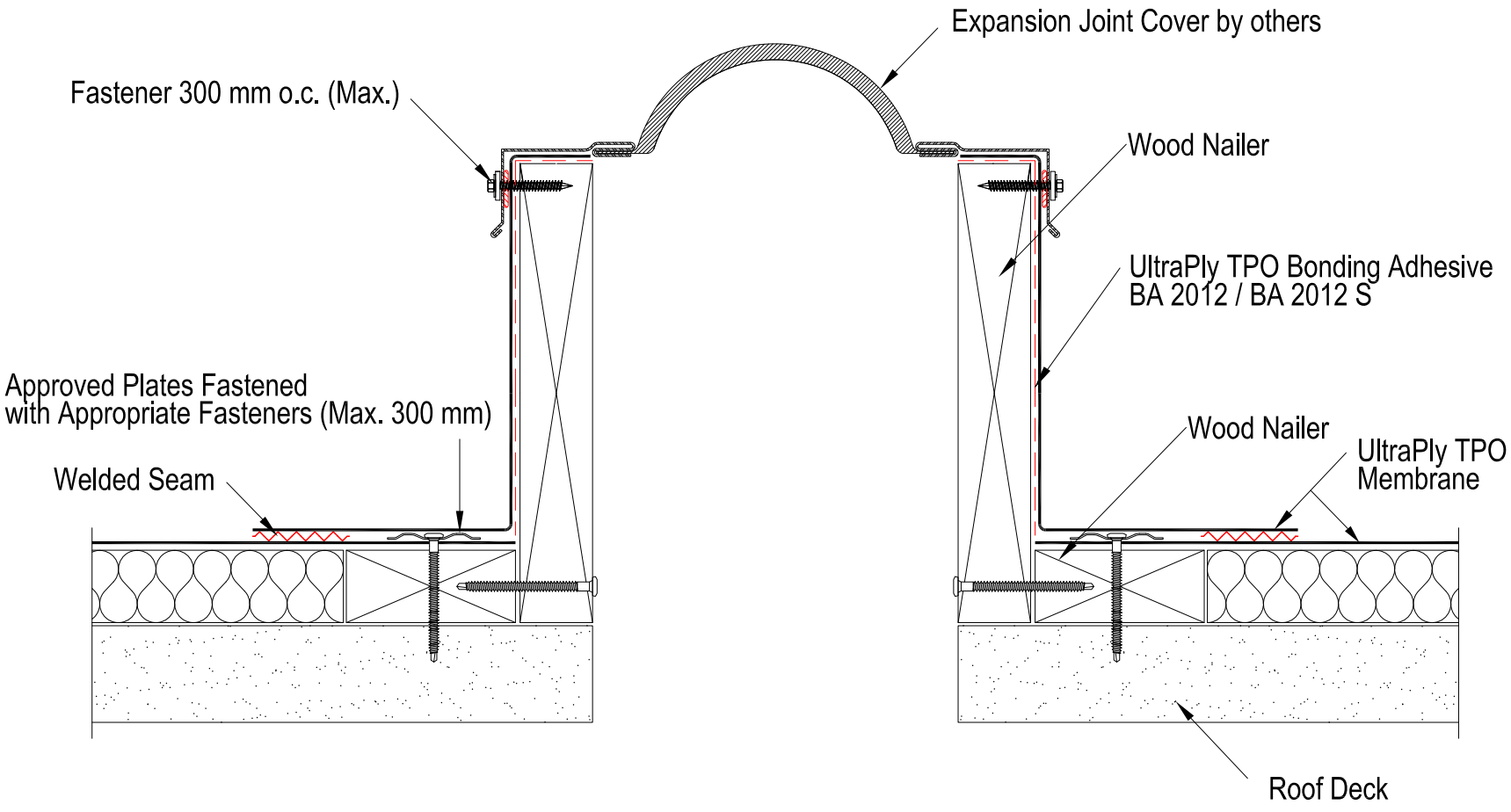


| | | | |
|---|---|---|---|
| Firestone<br>Firestone Building Products | **UltraPly TPO**<br>Raised Expansion Joint with Metal Joint Cover | **No.:** T - E - 3<br>05/2018 | **Systems**<br>All |

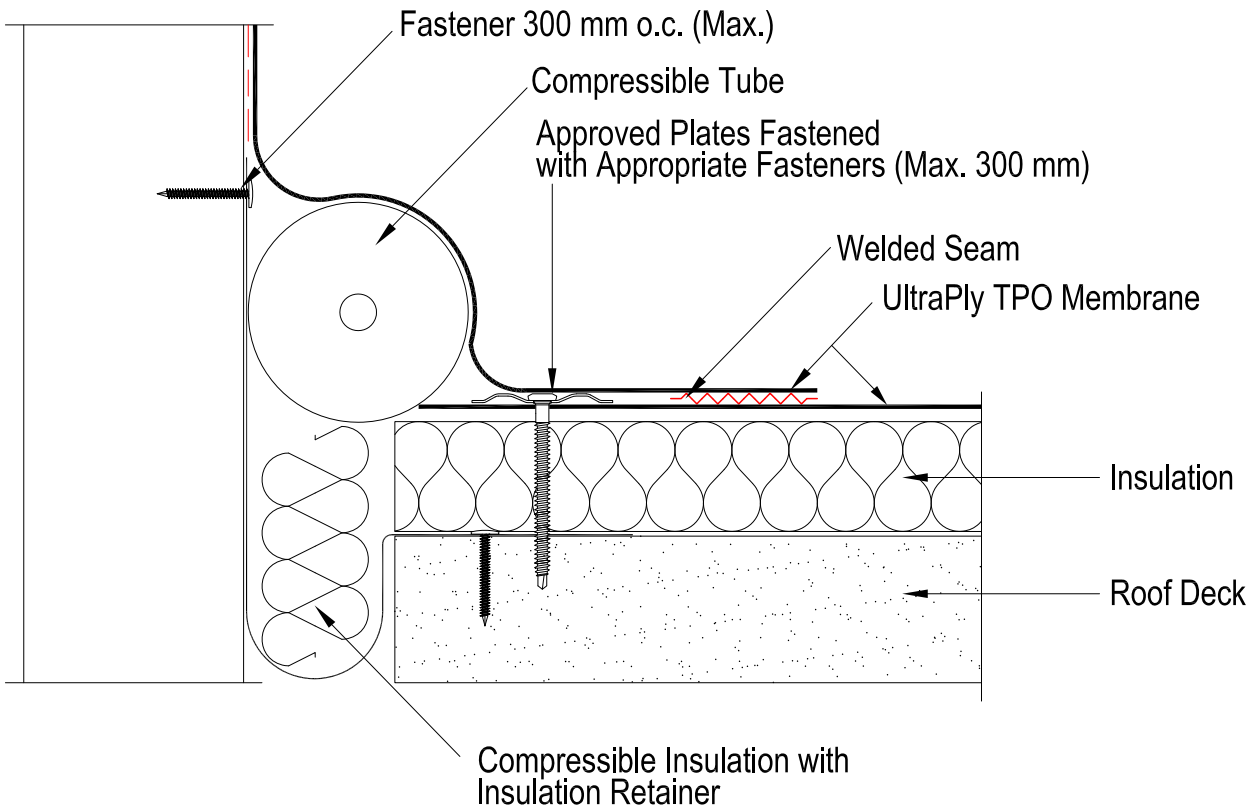


| | | | |
|---|---|---|---|
| Firestone<br>Firestone Building Products | **UltraPly TPO**<br>Wall Expansion Joint | **No.:** T - E - 4<br>05/2018 | **Systems**<br>All |

## 5.7 Roof edges

| | |
|---|---|
| T-RE-1 | Roof edge gutter using profile of UltraPly TPO Coated Metal |
| T-RE-2 | Roof edge using profile of UltraPly TPO Coated Metal |
| T-RE-3 | Joint between profiles of UltraPly TPO Coated Metal |
| T-RE-4 | Roof edge with edge profile |
| T-RE-5 | Alternative roof edge with edge profile |
| T-RE-6 | Roof edge using TPO QuickSeam Flashing |

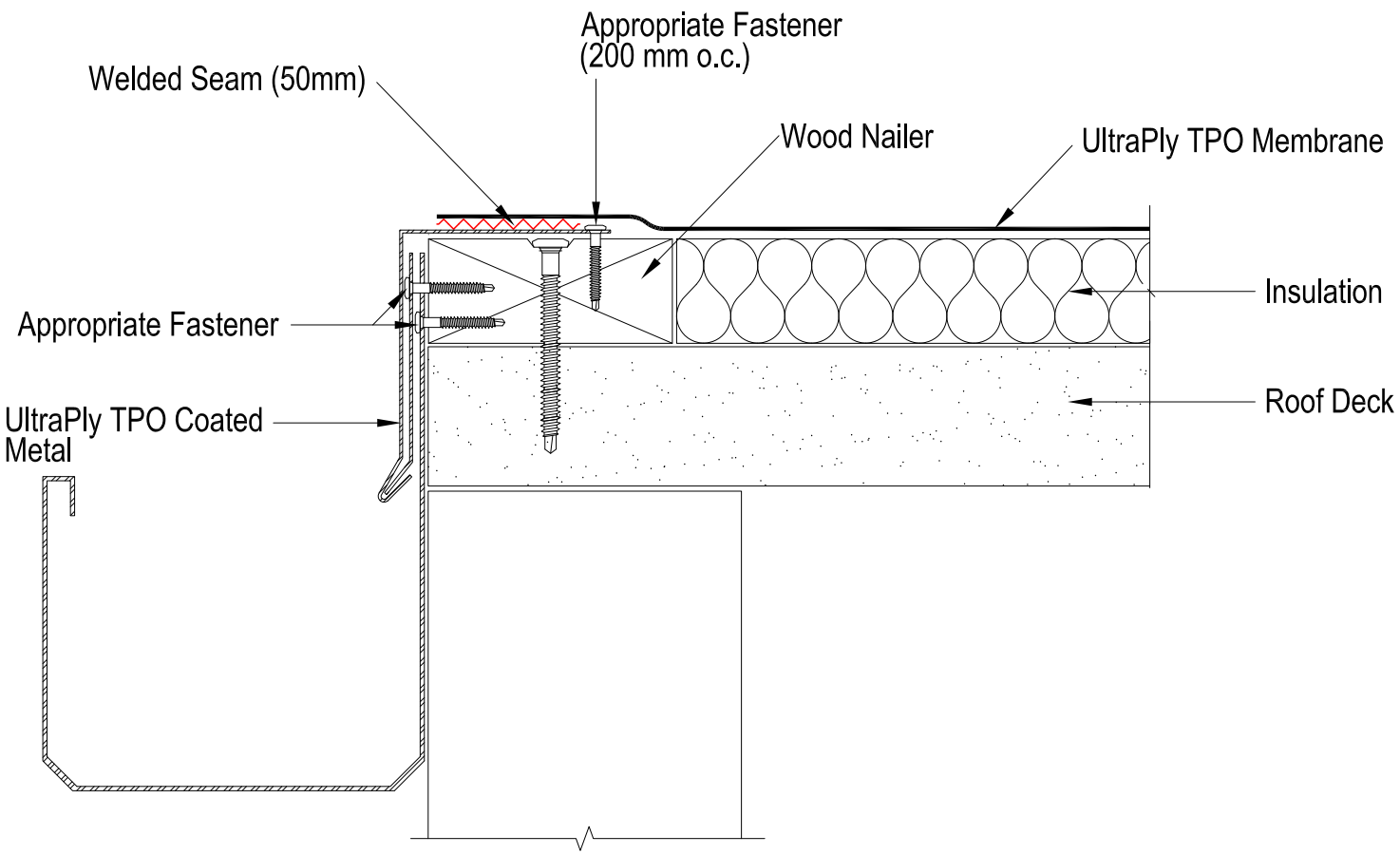


| | | | |
|---|---|---|---|
| Firestone<br>Firestone Building Products | **UltraPly TPO**<br>Roof Edge Gutter using profile of UltraPly TPO Coated Metal | **No.:** T - RE - 1<br>05/2018 | **Systems**<br>All |

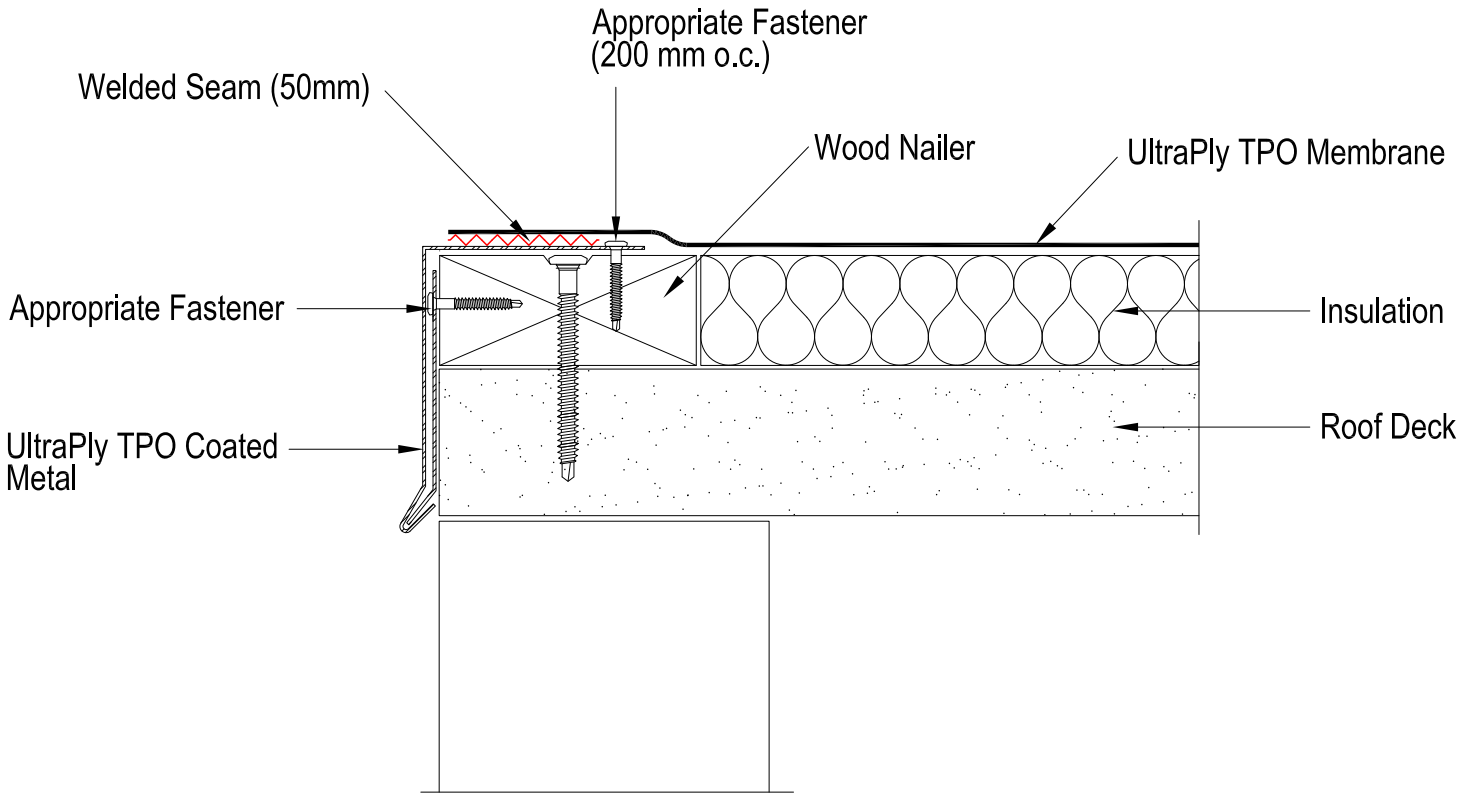


| | | | |
|---|---|---|---|
| Firestone<br>Firestone Building Products | **UltraPly TPO**<br>Roof Edge using profile of UltraPly TPO Coated Metal | **No.:** T - RE - 2<br>05/2018 | **Systems**<br>All |

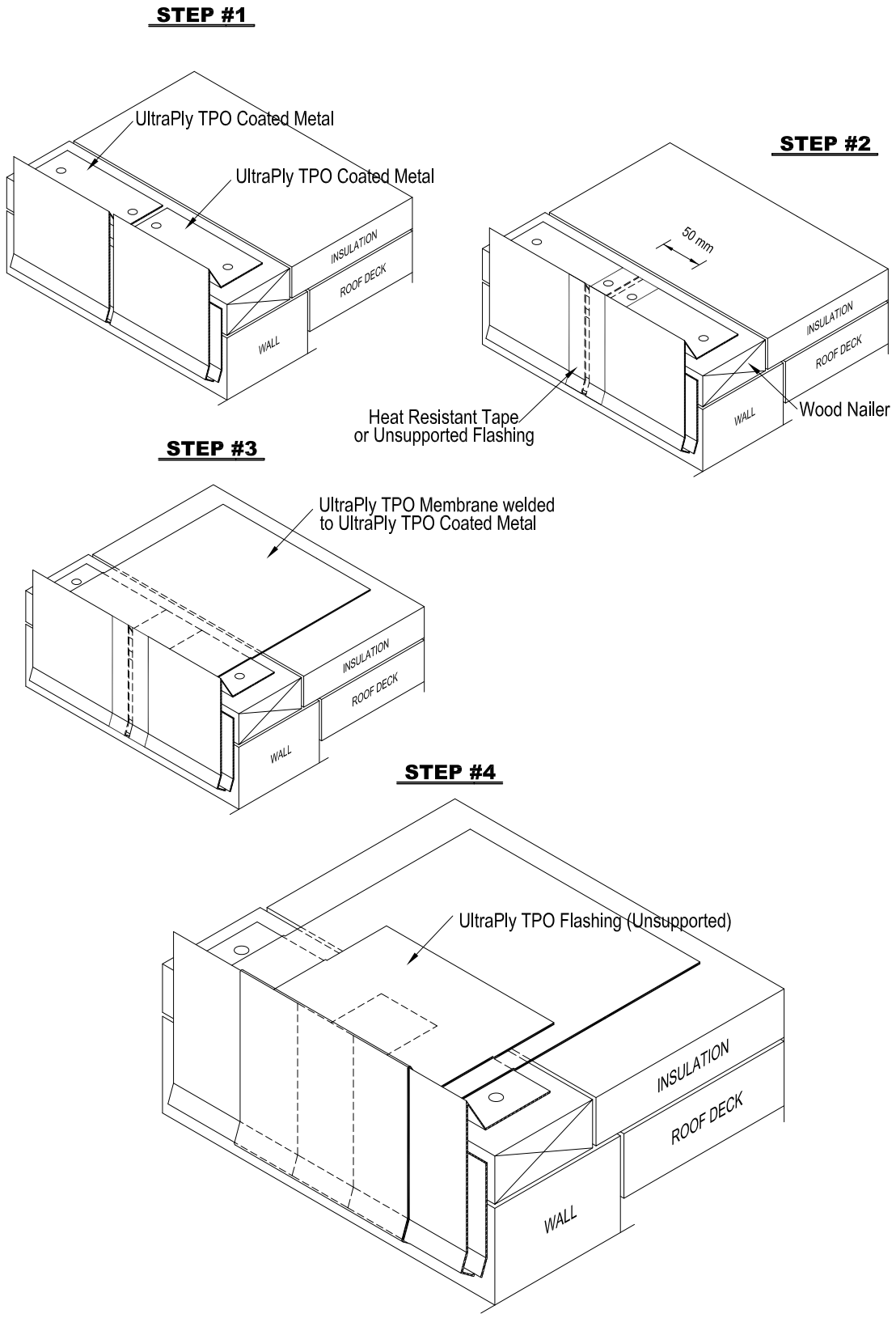


| | | | |
|---|---|---|---|
| Firestone<br>Firestone Building Products | **UltraPly TPO**<br>Joint between profiles of UltraPly TPO Coated Metal | **No.:** T - RE - 3<br>05/2018 | **Systems**<br>All |

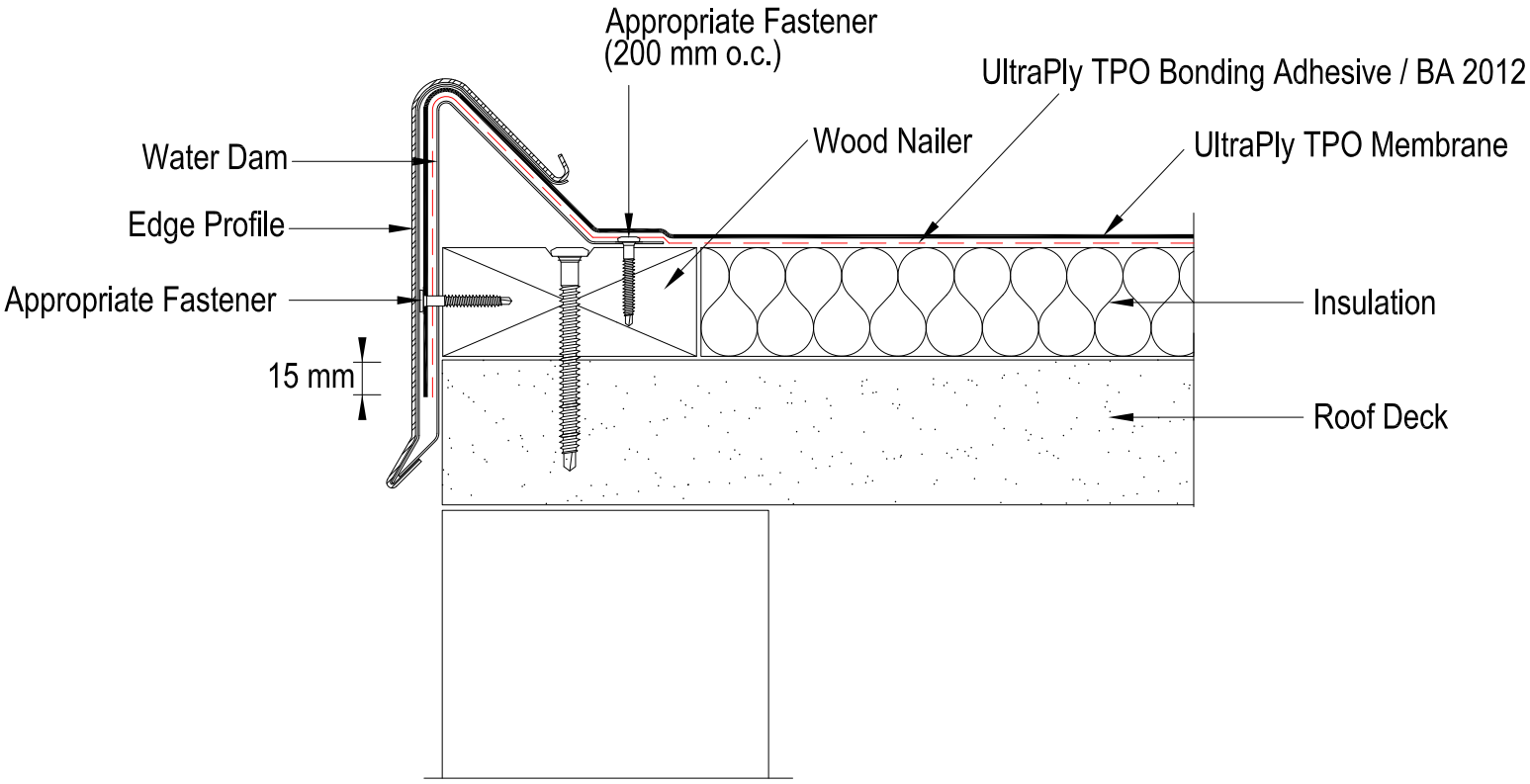


| | | | |
|---|---|---|---|
| Firestone<br>Firestone Building Products | **UltraPly TPO**<br>Roof edge with Edge Profile | **No.:** T - RE - 4<br>05/2018 | **Systems**<br>Adhered |

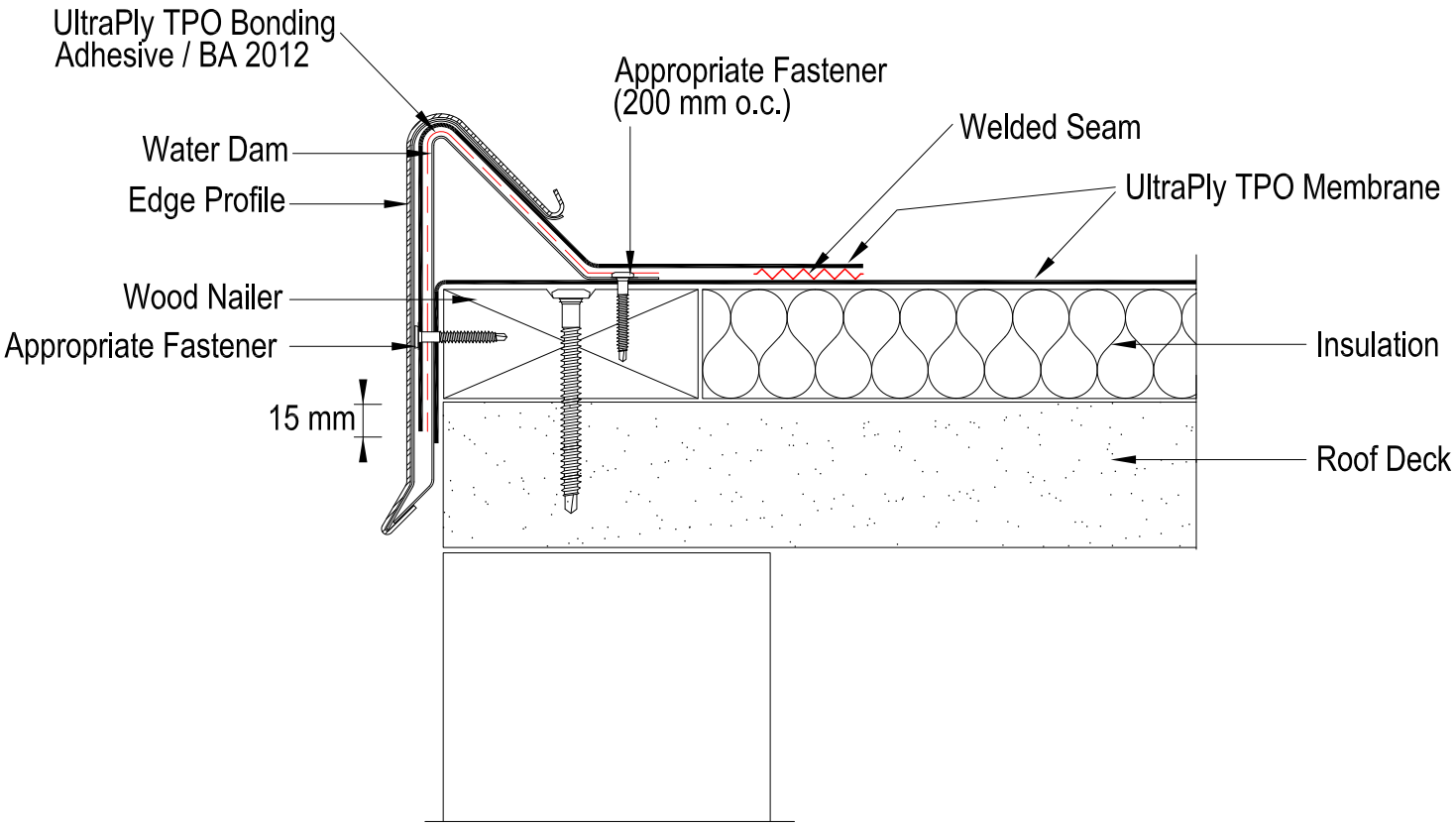


| | | | |
|---|---|---|---|
| Firestone<br>Firestone Building Products | **UltraPly TPO**<br>Alternative Roof Edge with Edge Profile | **No.:** T - RE - 5<br>05/2018 | **Systems**<br>All |

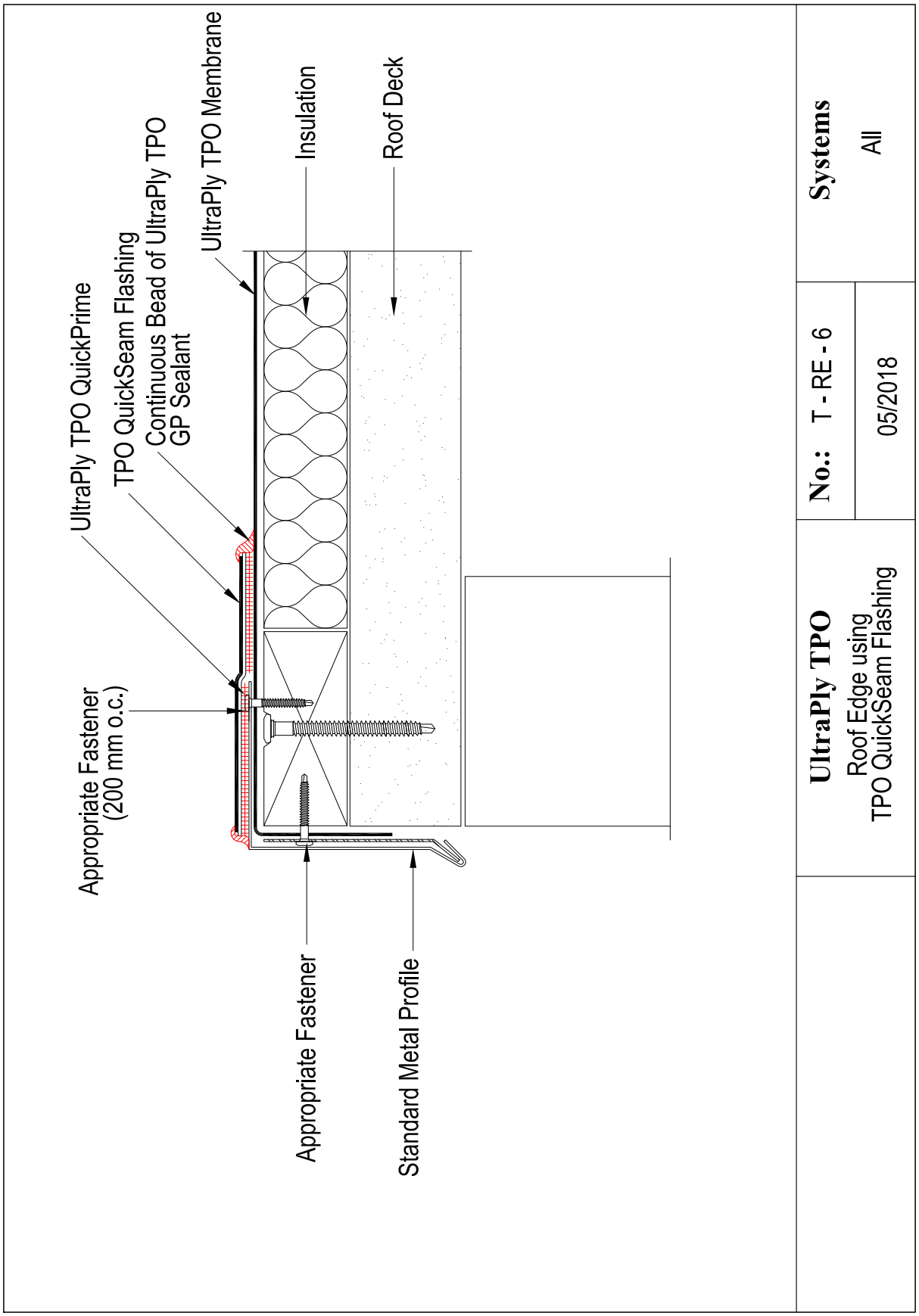
UltraPly TPO QuickPrime
TPO QuickSeam Flashing
Continuous Bead of UltraPly TPO
GP Sealant
UltraPly TPO Membrane
Insulation
Roof Deck
Appropriate Fastener
(200 mm o.c.)
Appropriate Fastener
Standard Metal Profile
UltraPly TPO
Roof Edge using
TPO QuickSeam Flashing
No.: T - RE - 6
05/2018
Systems
All

## 5.8 Wall terminations

| | |
|---|---|
| T-T-1 | Termination bar |
| T-T-2 | Termination bar at outside parapet wall |
| T-T-3 | Coping stone |
| T-T-4 | Metal coping |
| T-T-5 | Counterflashing |
| T-T-6 | Termination bar – elevation change |
| T-T-7 | Termination bar at joint in precast concrete panel |
| T-T-8 | Termination bar at wall expansion joint |
| T-T-9 | Monotrim profile |
| T-T10 | Intermediate attachment at wall flashing |

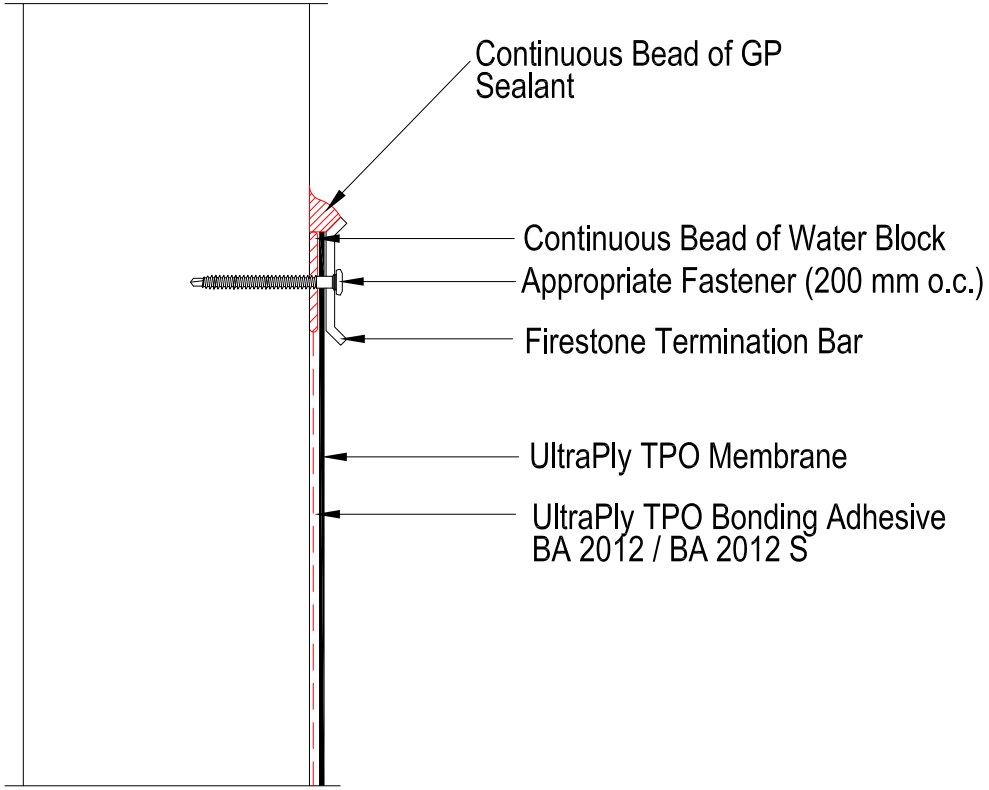


| | | | |
|---|---|---|---|
| Firestone<br>Firestone Building Products | **UltraPly TPO**<br>Termination Bar | **No.:** T - T - 1<br>05/2018 | **Systems**<br>All |

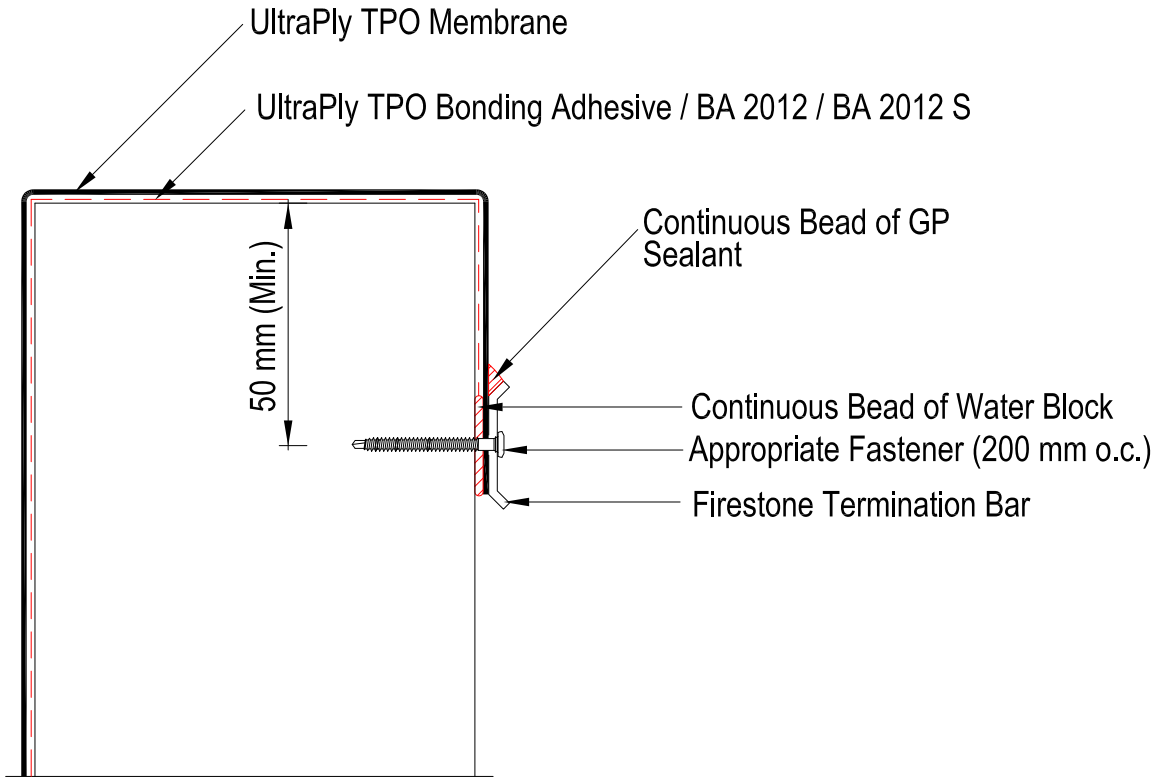


| | | | |
|---|---|---|---|
| Firestone<br>Firestone Building Products | **UltraPly TPO**<br>Termination Bar<br>at outside parapet wall | **No.:** T - T - 2<br>05/2018 | **Systems**<br>All |

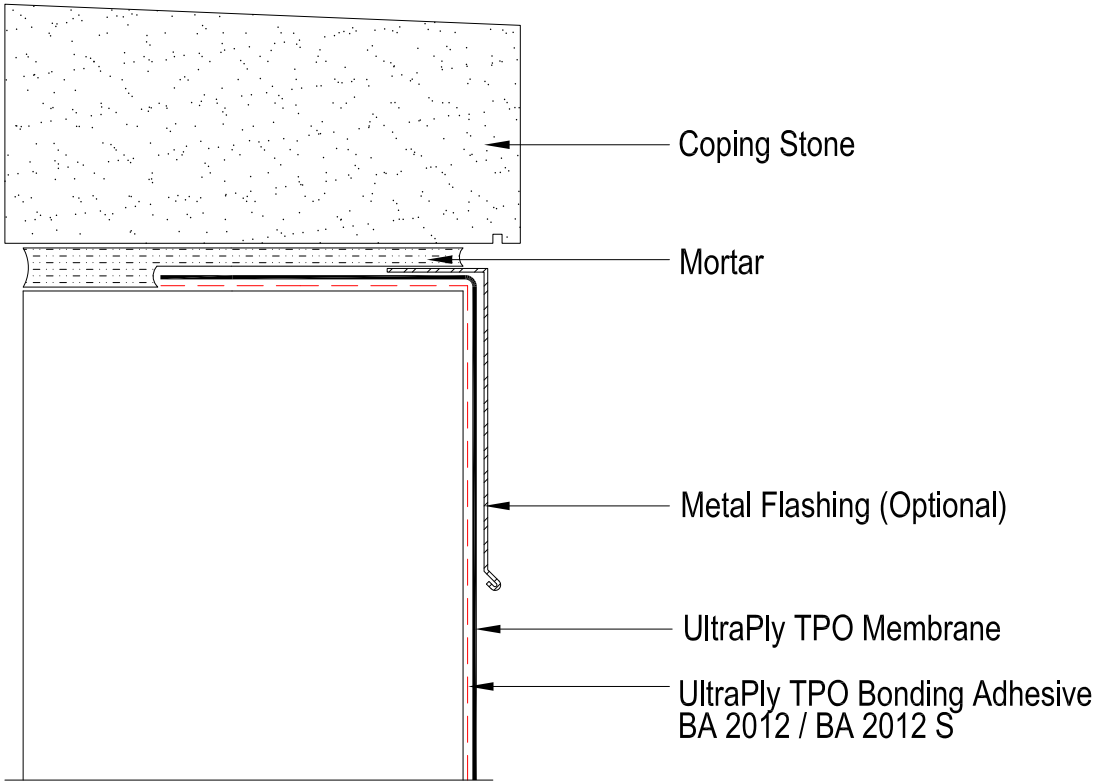


| | | | |
|---|---|---|---|
| Firestone<br>Firestone Building Products | **UltraPly TPO**<br>Coping Stone | **No.:** T - T - 3<br>05/2018 | **Systems**<br>All |

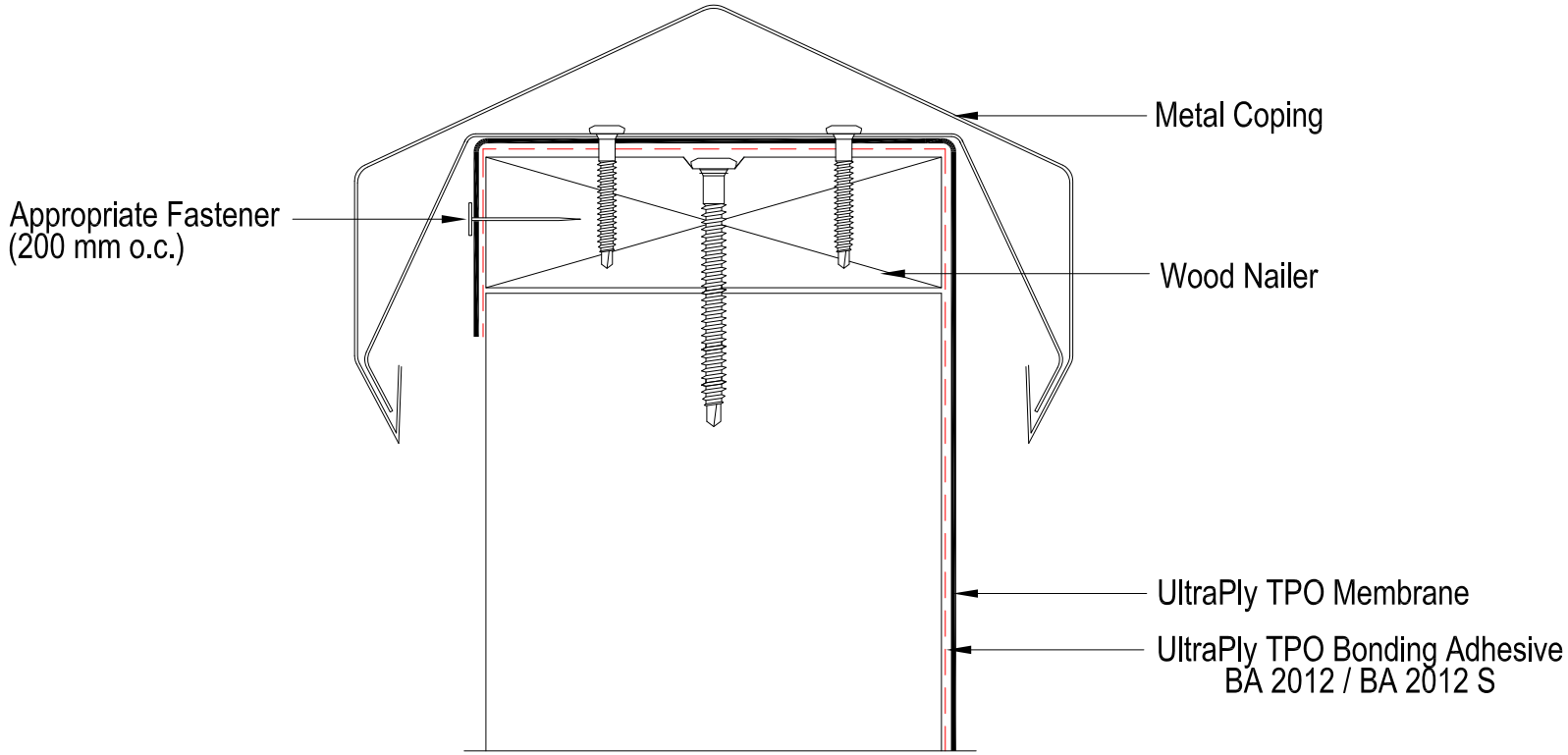


| | | | |
|---|---|---|---|
| Firestone<br>Firestone Building Products | **UltraPly TPO**<br>Metal Coping | **No.:** T - T - 4<br>05/2018 | **Systems**<br>All |

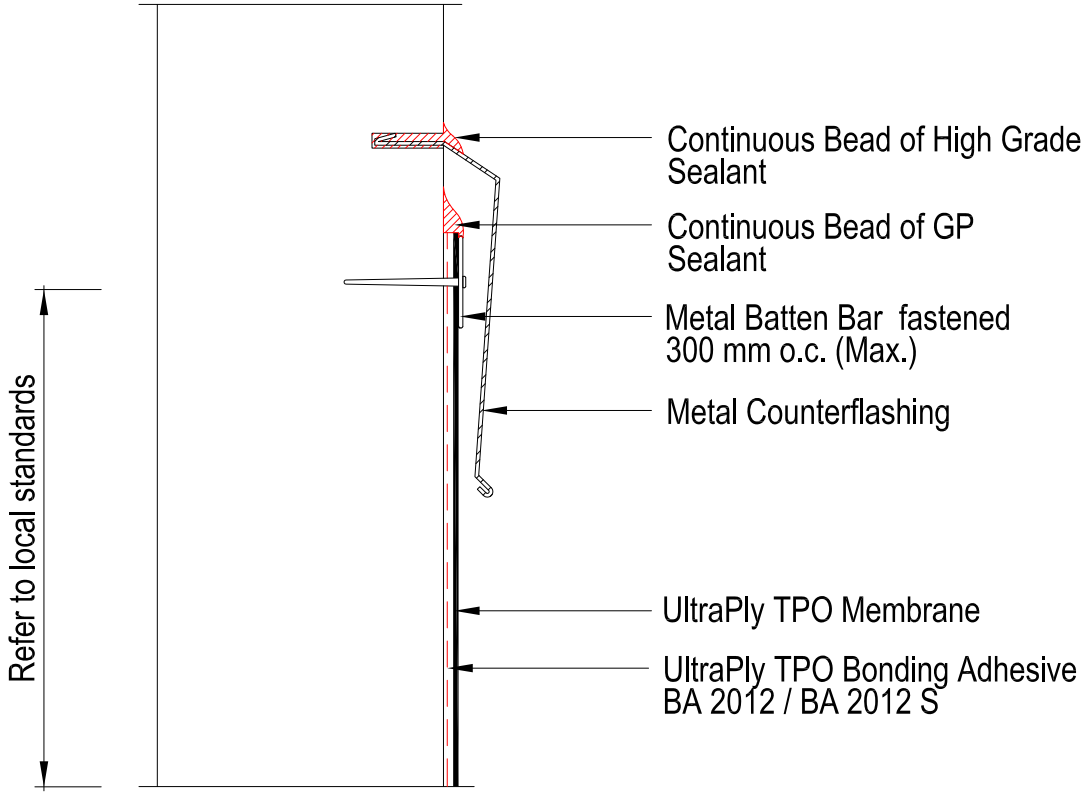


| | | | |
|---|---|---|---|
| Firestone<br>Firestone Building Products | **UltraPly TPO**<br>Counterflashing | **No.:** T - T - 5<br>05/2018 | **Systems**<br>All |

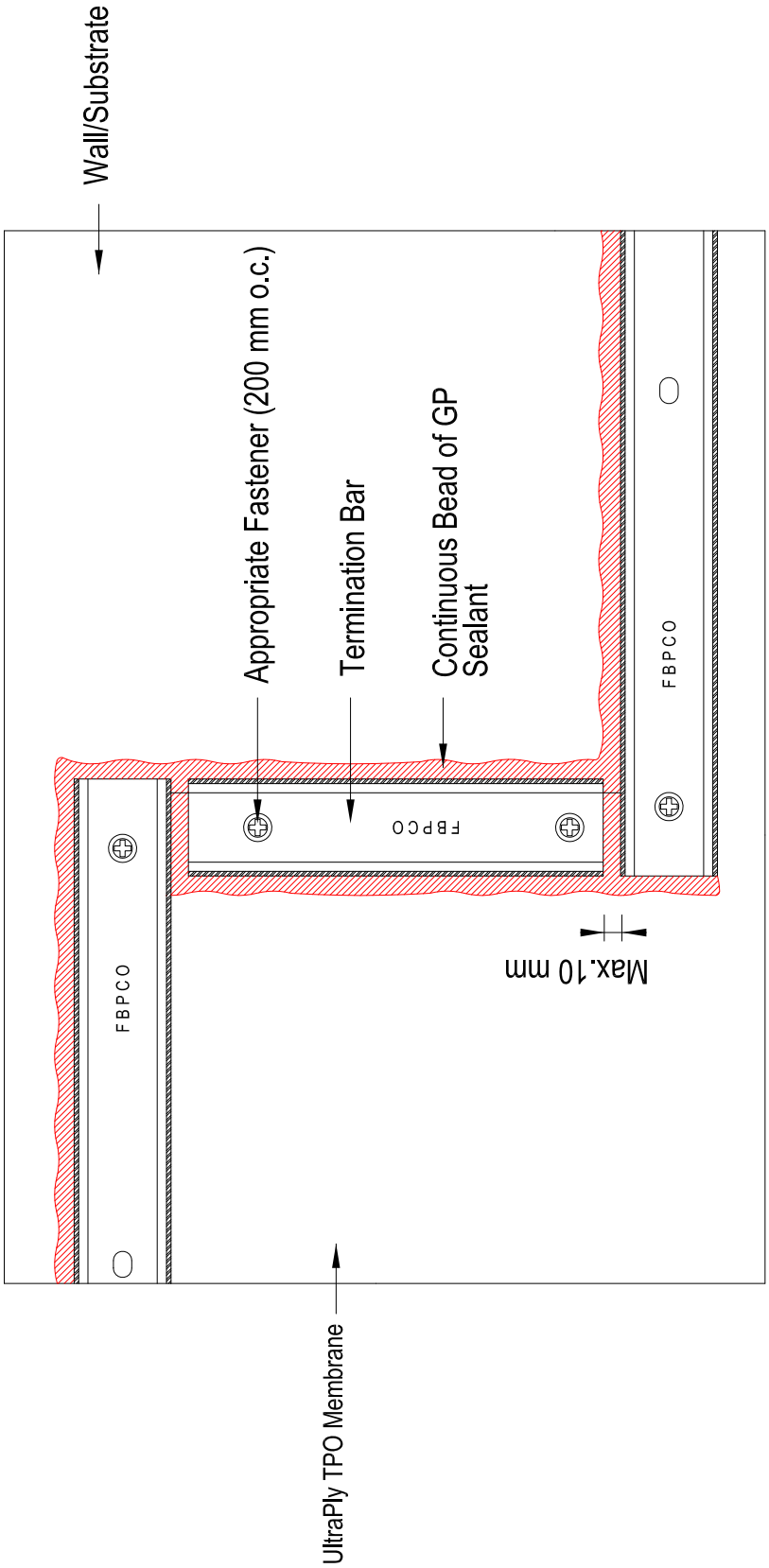


**Systems**
All

**No.:** T - T - 6
05/2018

**UltraPly TPO**
Termination Bar
Elevation change

Firestone
Firestone Building Products

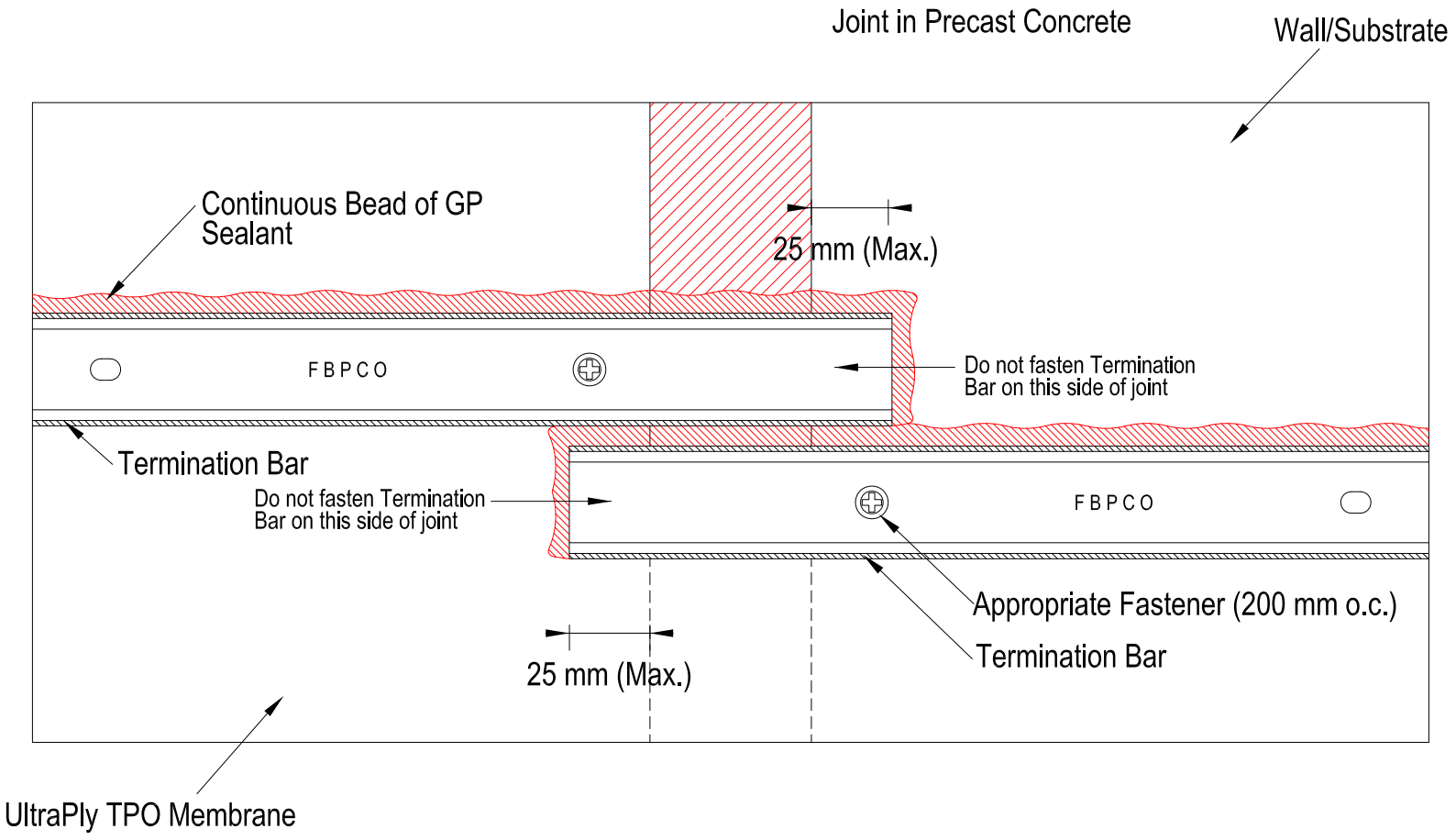


| | | | |
|---|---|---|---|
| Firestone<br>Firestone Building Products | **UltraPly TPO**<br>Termination Bar at Joint in Precast Concrete Panel | **No.:** T - T - 7<br>05/2018 | **Systems**<br>All |

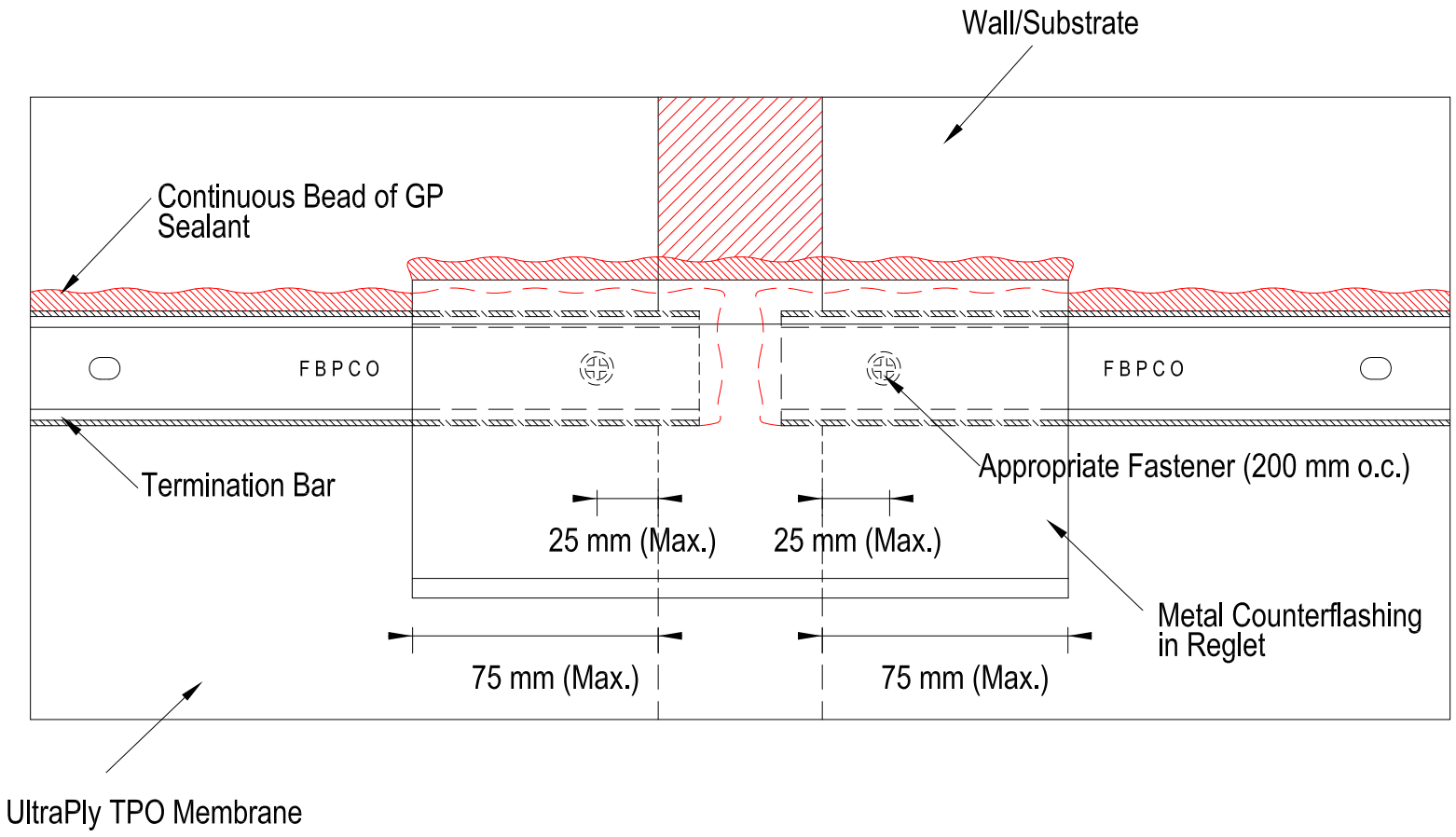


| | | | |
|---|---|---|---|
| Firestone<br>Firestone Building Products | **UltraPly TPO**<br>Termination Bar at Wall Expansion Joint | **No.:** T - T - 8<br>05/2018 | **Systems**<br>All |

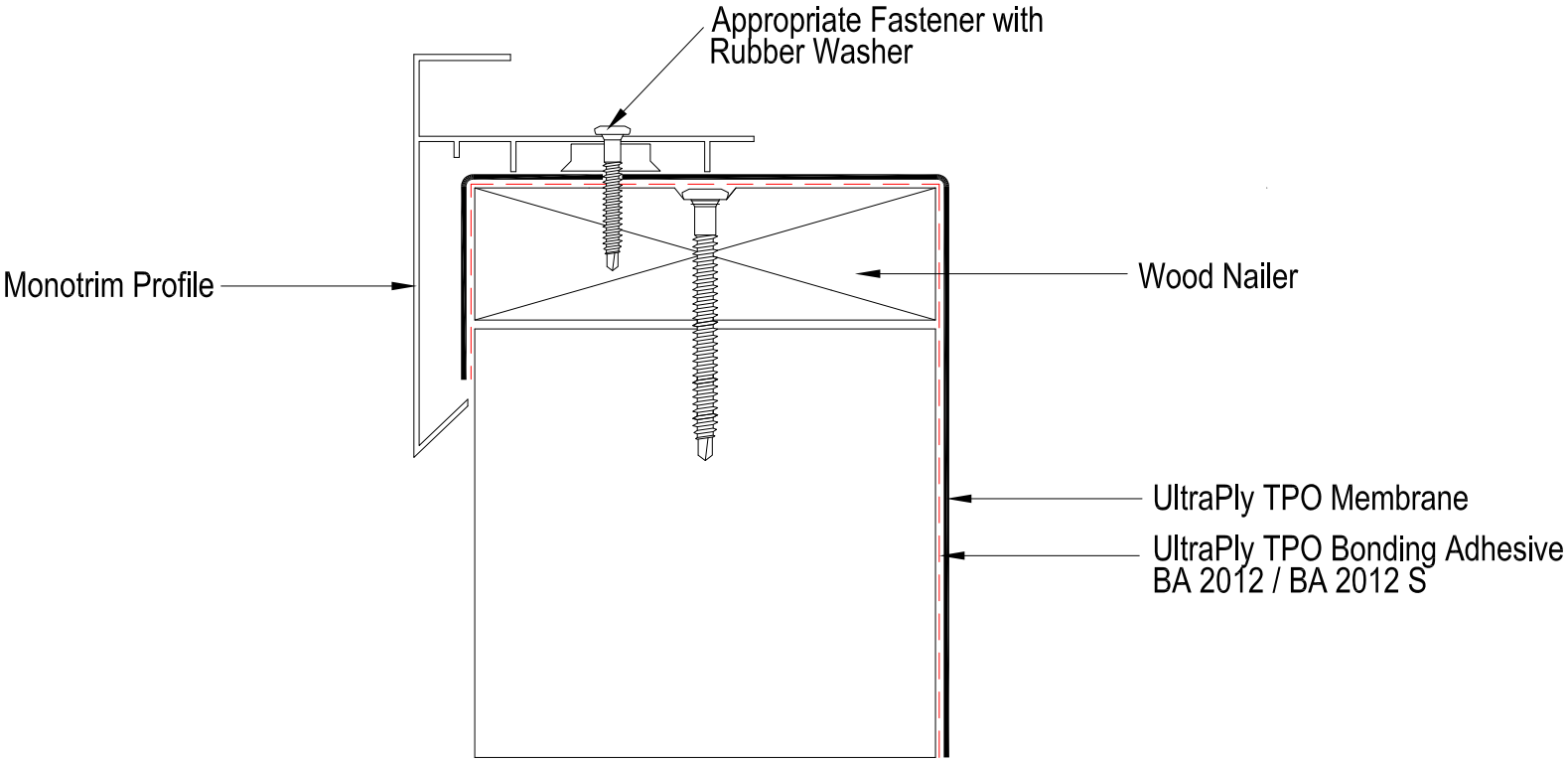


| | | | |
|---|---|---|---|
| Firestone<br>Firestone Building Products | **UltraPly TPO**<br>Monotrim Profile | **No.:** T - T - 9<br>05/2018 | **Systems**<br>All |

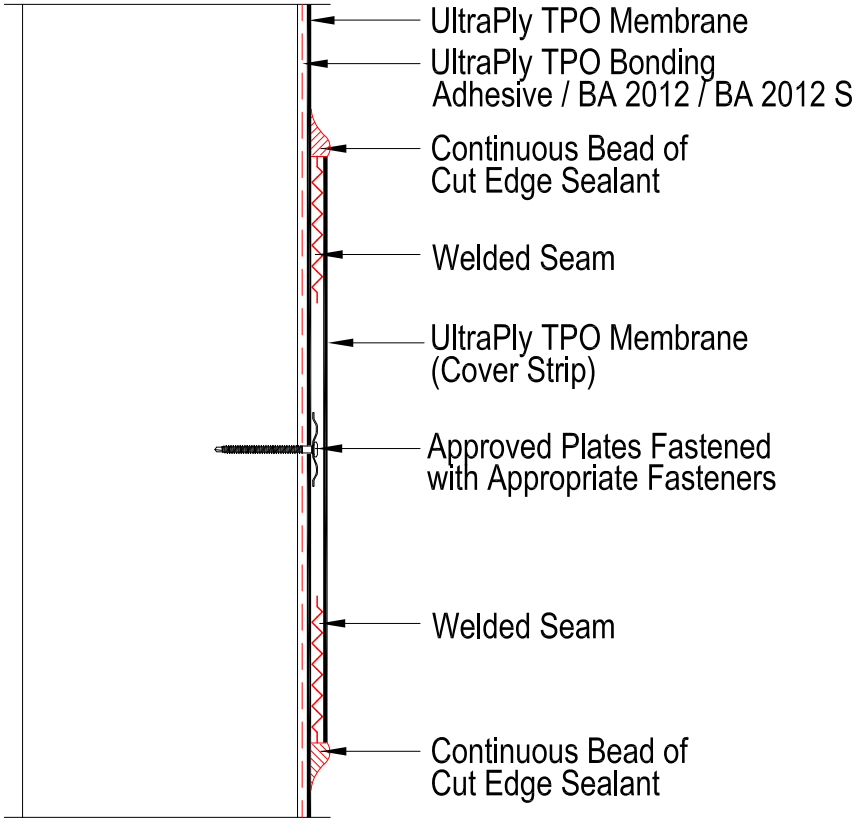


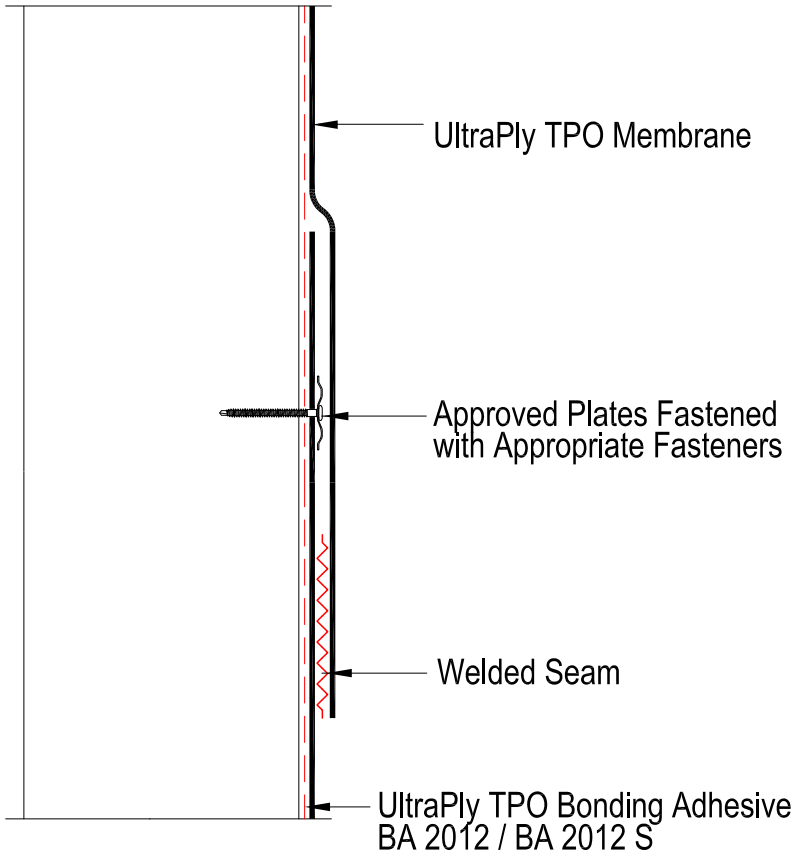


| | | | |
|---|---|---|---|
| Firestone<br>Firestone Building Products | **UltraPly TPO**<br>Intermediate Attachment at Wall Flashing | **No.:** T - T - 10<br>05/2018 | **Systems**<br>All |

Firestone

NOBODY COVERS YOU BETTER™

ARDEX